Multiple Use and Resource Reference System

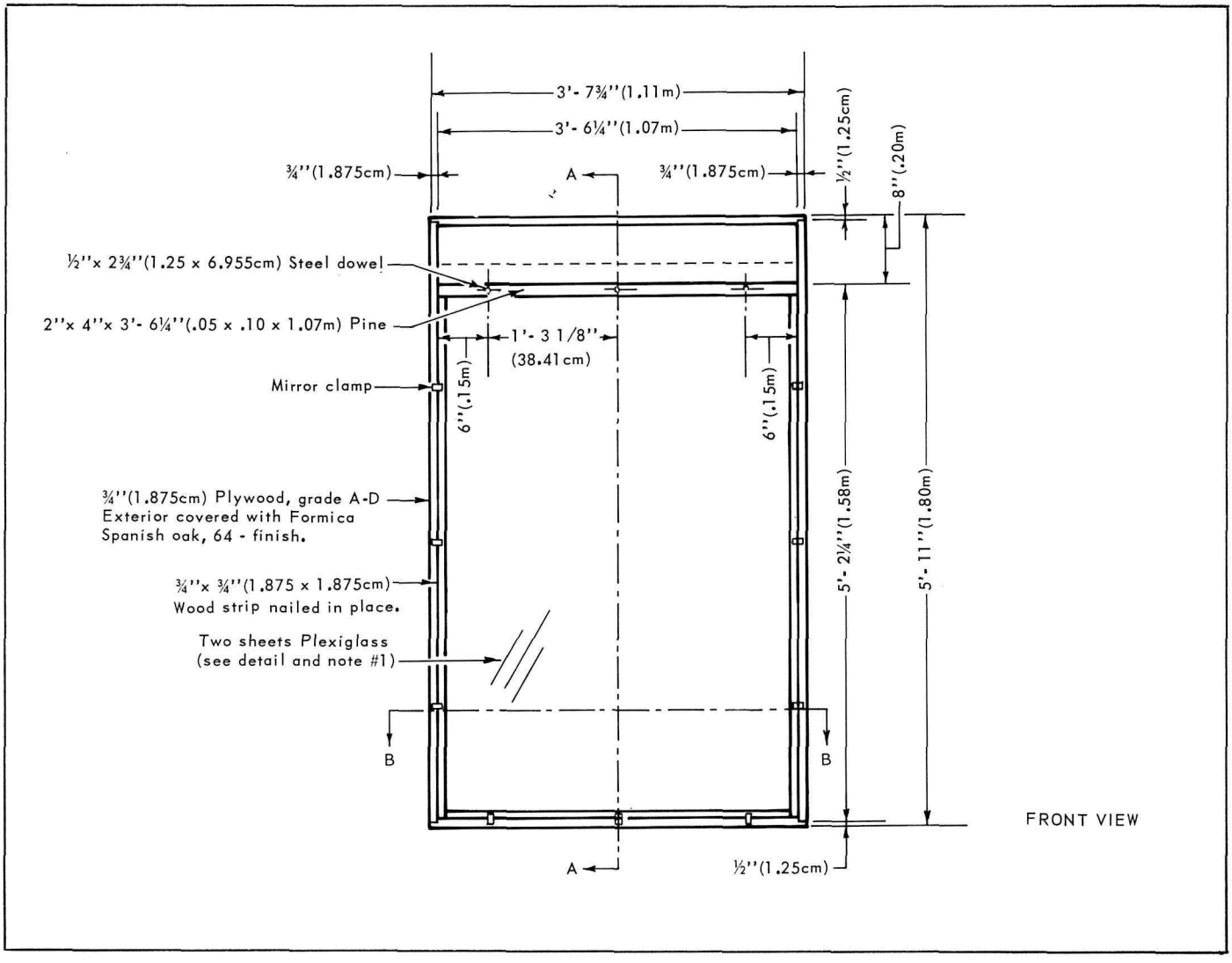

From National Park Service Landscape Architect W. Wayne Gardner comes this useful design for a parkwide multiple resource reference system. With this system, park personnel can view *at one time* all the complexities and interrelationships of land features and physical constraints, administrative and maintenance facilities, circulation systems, visitor facilities, basic resource information, and other data essential to effective day-to-day park management.

A lighted cabinet contains a park base map sandwiched between two sheets of plexiglass. The bottom sheet is white, to diffuse the light from the four 3" (7.5 cm)

(Continued on Sheet A-1359)

Heritage Conservation and Recreation Service in cooperation with the National Recreation and Park Association
DESIGN . . . A publication of Park Practice

REFERENCE SYSTEM		Contributed by
Index **A-1357**	Summer 1980	Rocky Mountain NP
	Control S-1616-A	USDI - NPS

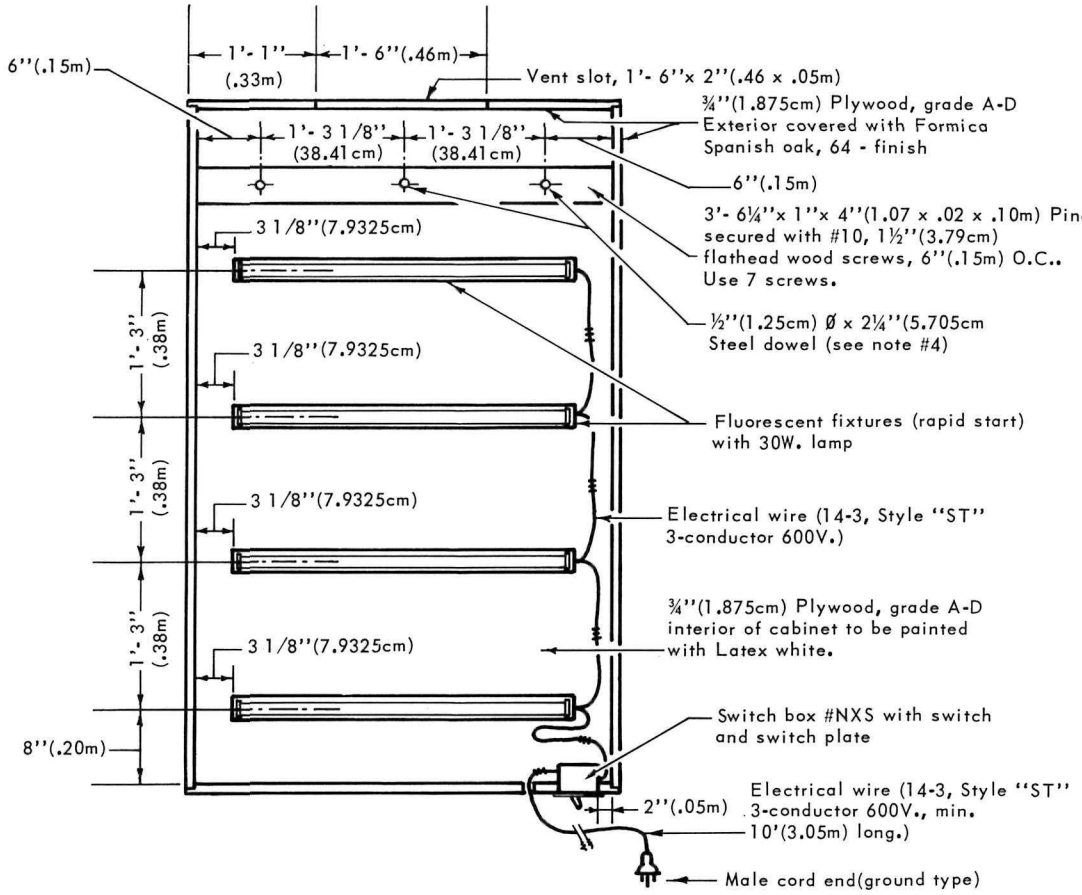

FRONT VIEW

ELECTRICAL LAYOUT

FRONT PANEL REMOVED

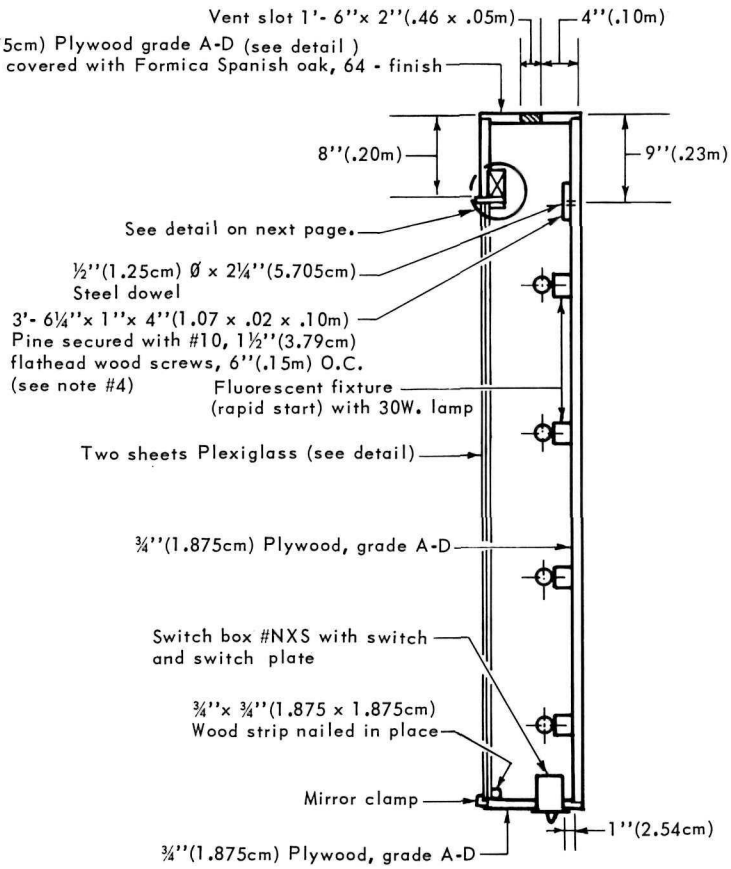

SECTION "A"

SIDE

NOTE:

1. Plexiglass shall fit flush with cabinet face and hang to have 1/16"(.15625cm) max. clearance from cabinet sides.
2. Products of equal quality may be substituted material.
3. Interior of cabinet to be painted with white Latex.
4. A snug fitting rubber washer shall be used over each steel dowel to secure overlays.

(Continued from Sheet A-1357)

fluorescent tubes placed behind it; the top sheet is clear and can be drawn on with a grease pencil during presentations or planning sessions. Mylar overlays, identifying the various systems, resources, complexities, and components of the park are hung over the base map, as needed, to indicate overall relationships. The overlays are held in place with steel dowels. When not in use, the overlays can be stored on the back of the cabinet, leaving only the base map visible.

This ingenious system expedites and simplifies the collection and analysis of data by presenting all information regarding the park in an analytical and orderly fashion. It also can provide new employees with a wonderful orientation to the park.

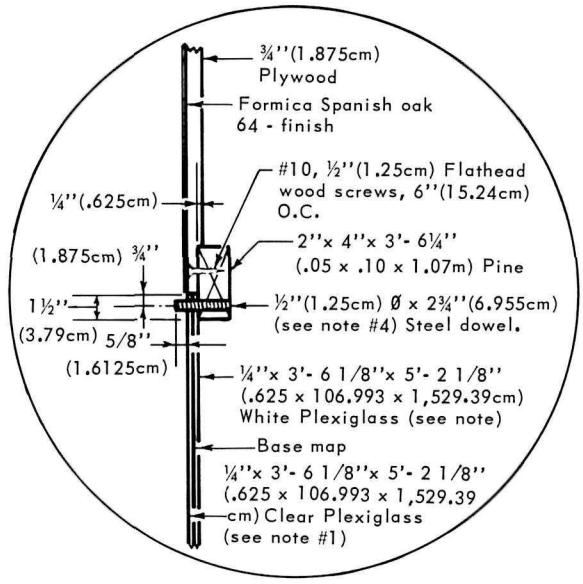

DETAIL

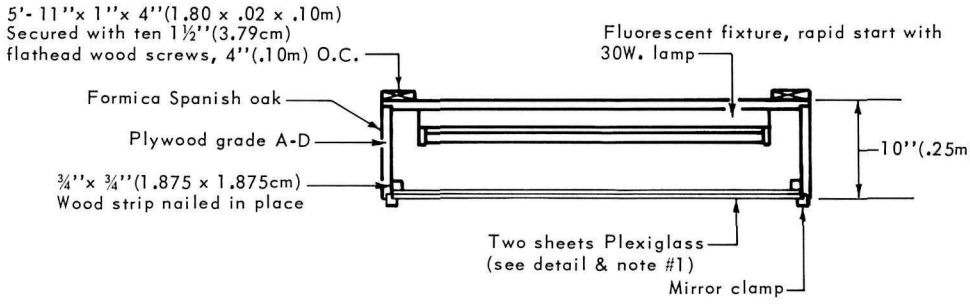

SECTION "B"

END