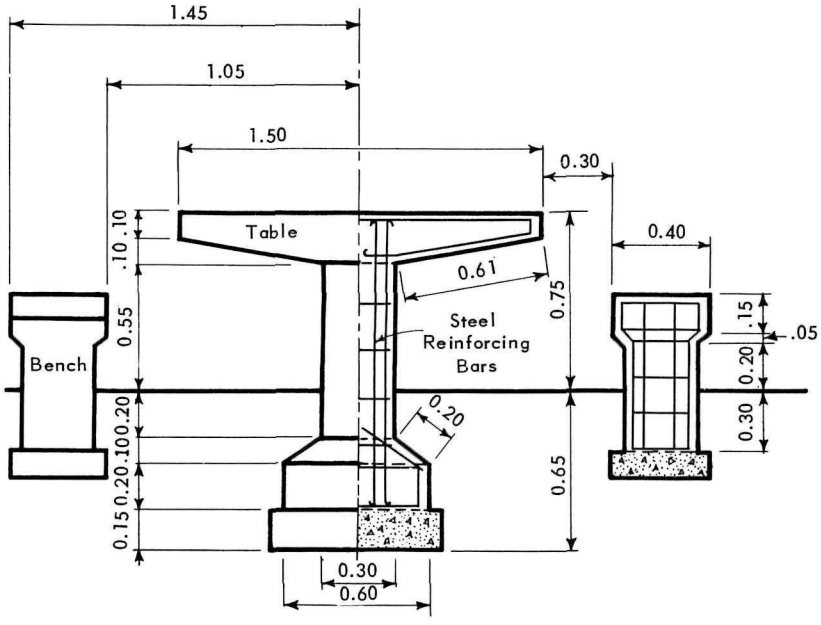

ÉLEVATION

From across the broad Pacific comes this distinctive picnic table design of the National Parks Division, Japanese Ministry of Health and Welfare. The table and all four sector-type seats are cast in place, each as a separate unit. Both the table and seat pedestals extend below ground to concrete footings. The over-all effect is one of strength and harmony with environment.

The Japanese National Parks Director suggests that further studies be made regarding the distance between table and benches.

The accompanying photograph was taken in Mikuma–Zan (Three Bear Mountain) Park, Japan.

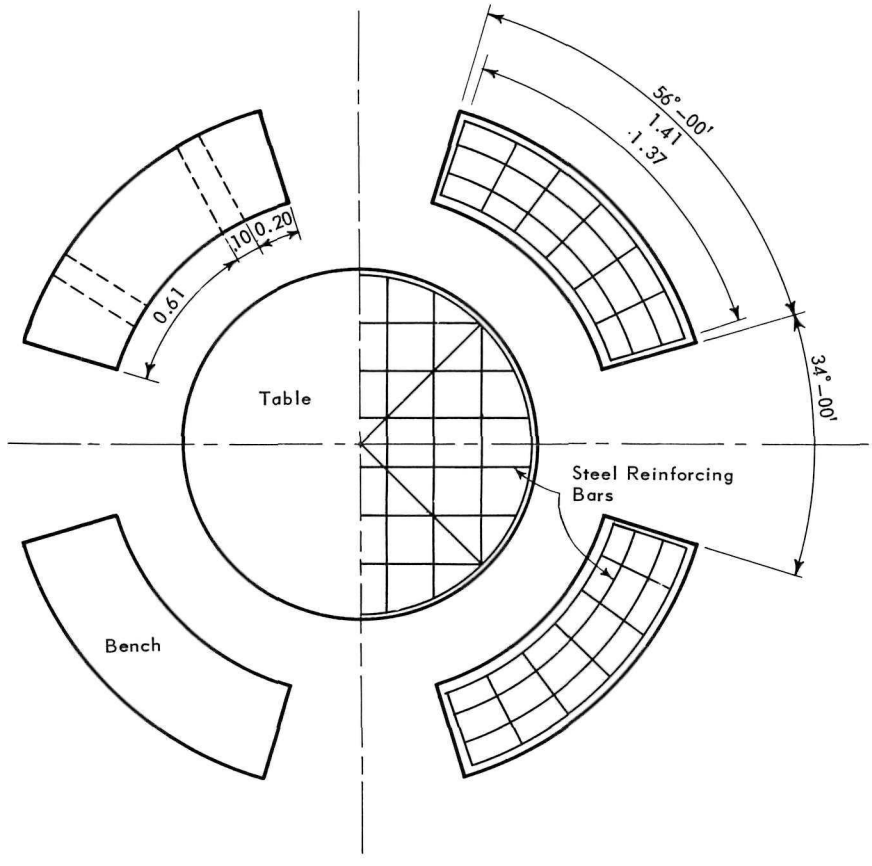

PLAN

All Dimensions
are in meters

0 0.25 0.50 1.00

The National Conference on State Parks in cooperation with The National Park Service			PICNIC TABLE Mikuma–Yama, Sumoto City Setonaikai National Park
date May 1959	plate 113 C		Contributed by JAPAN Ministry of Health and Welfare National Parks Division
index R–4265	control C–0246–R		