A U–type floating dock with provision for canopy if desired. Gangplank is pivoted at both ends to permit rise and fall. Floats are positioned to allow additional boat wharfing between units, and are held rigidly in position by means of pipe extending from shoreside corners to anchor piles. These booms also pivot vertically. An additional pipe might be used at shoreside corners to help maintain spacing between units.

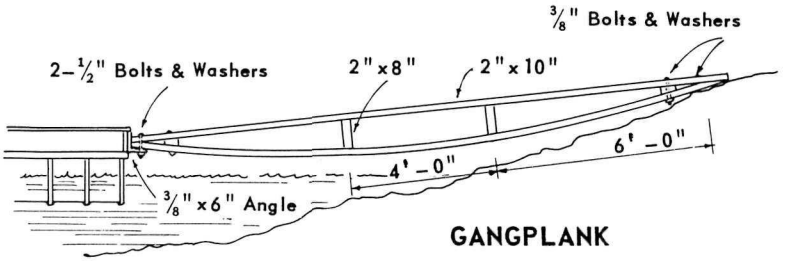

GANGPLANK

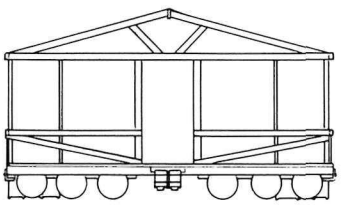

ELEVATION, CLOSED END

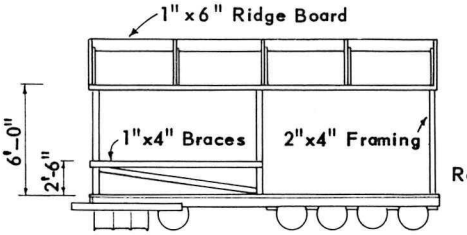

SIDE ELEVATION

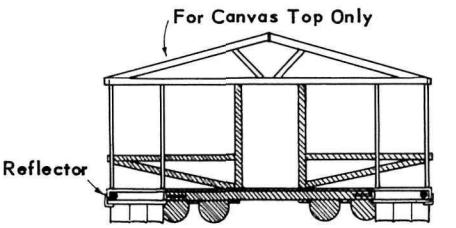

ELEVATION, OPEN END

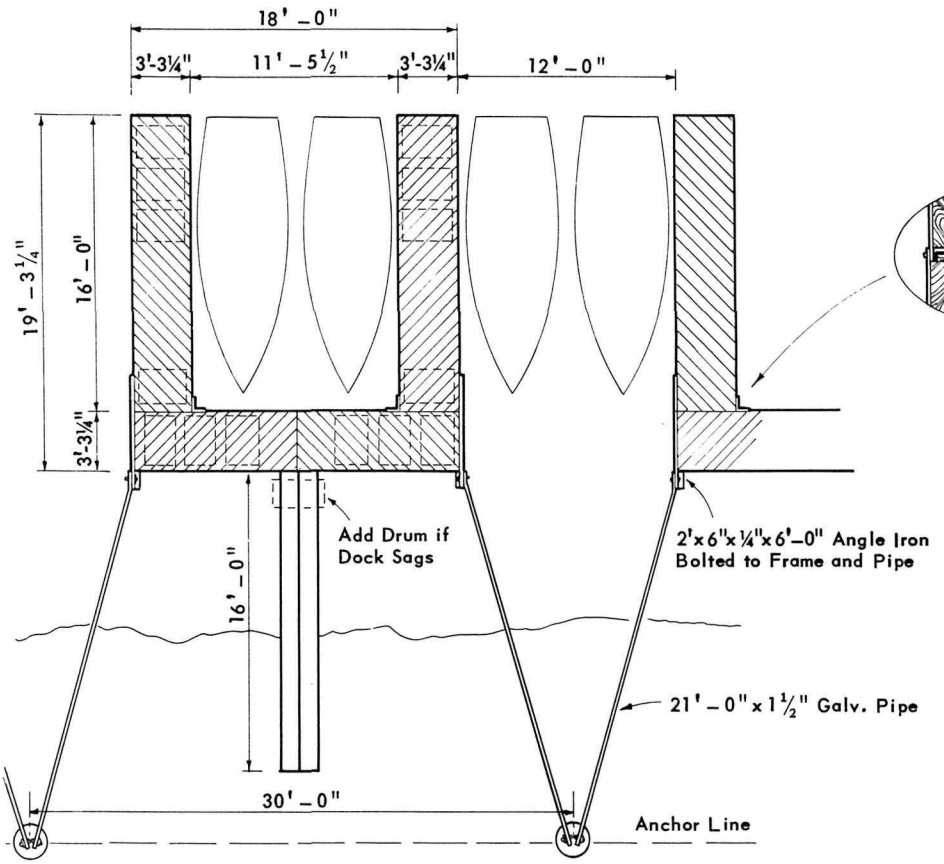

PLAN

Note: If canopy is not used, irons may be cut, overlapped 2" and bolted in order to facilitate removal of dock.

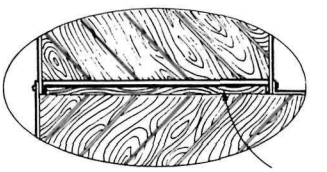

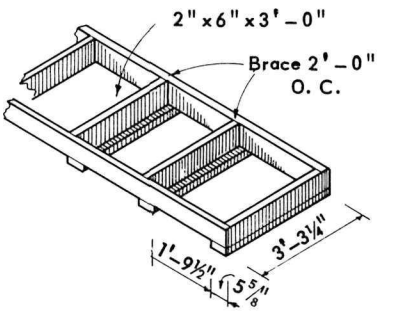

SPACING FOR DRUMS

0 6'

United States Department of the Interior, National Park Service **THE PARK PRACTICE PROGRAM** National Conference on State Parks • National Recreation & Parks Association				BOAT DOCKS
DATE	May 1958	PLATE	63(rev.)	Contributed by OHIO Department of natural resources
INDEX	R-4866	CONTROL	C-0195-R	Dept. of Nat. Resources