GRIST

VOLUME 15/NUMBER 6 NOVEMBER/DECEMBER 1971

STEEL POST DRIVER

The simple driver shown in the sketch can be built in about a half hour from scrap material. Jack G. Stout, maintenance foreman, Colonial National Historical Park, Yorktown, Va., cites a number of advantages. The driver is easily handled by one man which makes it possible for him to stand on the ground while driving.

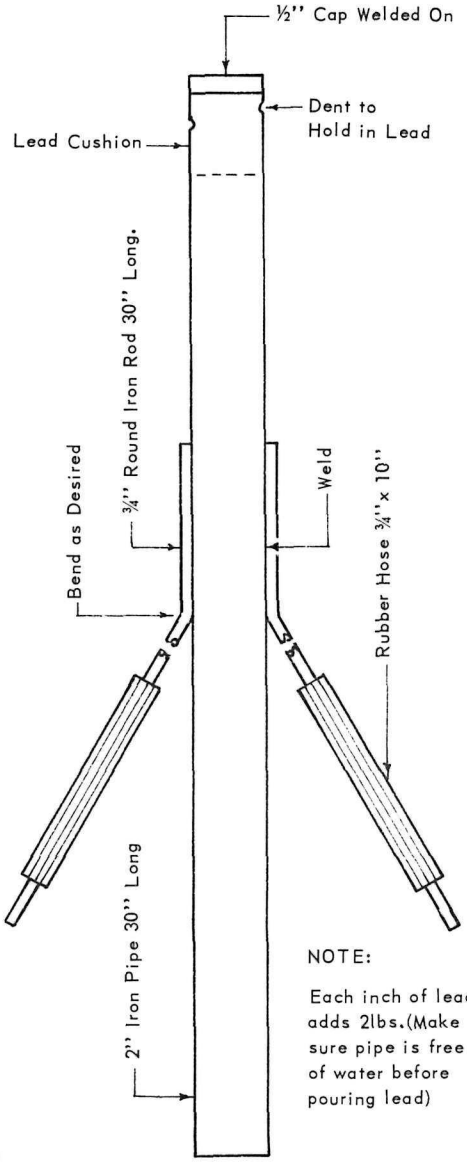

Also, it is safer and less tiresome. By allowing the driver to spend more time driving, installation time can be cut by 30 per cent.

The driver is constructed of 2-inch pipe and 3/4" round iron rod (see sketch for other dimensions). The length of pipe can vary according to length of post to be driven. The length shown works fine for a post from six to eight and a half feet.

If additional weight is desired, lead may be added. One inch of lead will add approximately two pounds of weight. It will also help cushion any shock. Make sure the pipe is thoroughly dry, make a small dent on each side of the pipe near the end (to hold lead in place); then pour in the lead. Weld a 1/2" cap to the top of the pipe and the iron rod (bent to the right angle) to the sides.

NEW LOOK FOR PARK PRACTICE PUBLICATIONS

Updated materials, new graphic design and attractively colored three-ring heavy-duty binders are all part of the new look of PARK PRACTICE PROGRAM publications.

Vinyl-covered binders replace the hard plastic covers which many found poorly suited for shelving and inserting new materials. They are designed for standard 8 1/2x11 inch pages and come in antique gold, merida yellow, metallic green and willow green.

New subscribers will receive the binders as part of their initial order. Previous subscribers can order them by writing the Park Practice Program, National Conference on State Parks/National Recreation and Park Association, 1700 Pennsylvania Avenue, N.W., Washington, D.C. 20006. (A brief reminder here too that subscription renewals are due in January!)

The first stage of the program revision has also included a new graphic design for GRIST and a new size for GUIDELINE.

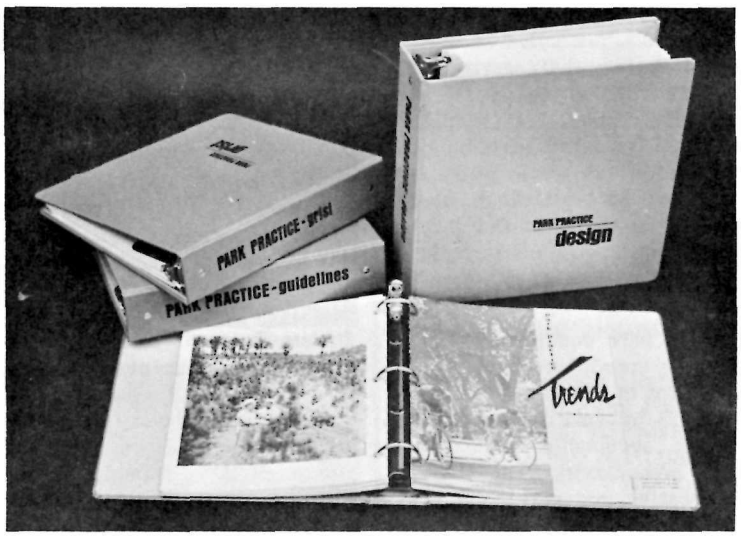

The New Park Practice Library

Formerly 6x9 inches, all GUIDELINE issues are now 8 1/2x11 and will fit only the new binders.

The PARK PRACTICE PROGRAM welcomes all contributions, written or illustrated, to its publication. Submitted material need not include final sketches. Photographs will be appreciated.

Ideas for GRIST, DESIGN, TRENDS and GUIDELINE should be sent to:

Chief, Division of State & Private Assistance
National Park Service/U.S. Dept. of the Interior
801 - 19th Street, NW
Washington, D.C. 20240

(A special form for GRIST & DESIGN is provided on pages 63 and 64.)

Speaking of Interpretation

GRIST

a bimonthly publication of the nonprofit, educational park practice program cooperatively conducted by the National Park Service, U.S.D.I., the National Conference on State Parks, and the National Recreation and Park Association.

Material for Publication should be sent ONLY to:

James A. Burnett
GRIST Editor, Division of State and Private Assistance
National Park Service, Washington, D.C. 20240

GRIST does not accept advertising for publication, and the mention of any commercial product, service, or manufacturer herein does not infer or imply endorsement, nor does it infer or imply that other similar products, services or manufacturers are not equally acceptable. Manufacturer's names and addresses are given as a source of information should products or services reported herein be not available locally. These pages are open to the mention of any and all products and services which the publishers consider will tend to more efficient and economical operations in park and recreation work.

Subscription Rates

NEW subscr. to Program (all vols. DESIGN, GUIDELINE, TRENDS, 2 prev. yrly. vols. of GRIST; plus all publications as issued; thru 1st calendar yr.), 1st yr. only: . . . . . $50.
RENEWAL (all publications as issued thru calendar yr.) . . . $15.
GRIST only renewal $3.50
GRIST, additional quantities of each issue to new or renewal subscriptions, sent to same address, ea. annual vol. (no binder) $1.
Same, but with new hard plastic binders, 1 set of four . . . $ 7.75 (separately, $3.75 each)

Subscription applications and fees, and membership inquiries should be sent ONLY to: Executive Secretary, National Conference on State Parks, 1700 Pennsylvania Avenue, N.W., Washington, D.C. 20006.

Printed by District Service Printers, Inc., Washington, D.C. Not printed at Government expense.

NOTE: New GRIST binders are available from the National Conference on State Parks, 1700 Pennsylvania Avenue, N.W., Wash., D.C. 20006 for $3 each.

CHANGING SIGNS FOR CHANGING SCENES

Volcanic eruptions, lava flows, and fire happen with sufficient frequency to give a "here today and gone tomorrow" character to the scene at Hawaii Volcanoes National Park. A "permanent" feature, such as the crater pits mentioned in the sign shown in the photo may become hills.

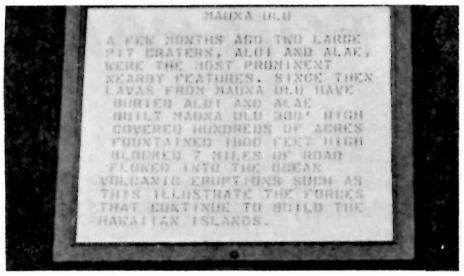

An area covered with vegetation and marked with interpretive signs may suddenly be burned over.

With that kind of changing scene, Park Naturalist Patrick D. Crosland has to be ready to change with it. His solution is to use ordinary picture frames to hold temporary signs, and he has found the 15 3/8" x 18 3/8" size most suitable. Masonite or plywood used for backing is painted brown, and the interpretive message is cut in yellow poster board, using the park's stencil machine. When assembled the brown shows through to make brown letters on a yellow background. (Yellow and brown are the standard sign colors for one area of the park.)

If, or as, the situation changes, all or part of the sign can be altered by cutting out the required change on the stencil machine and replacing the old line or lines in the frame. Even in Hawaii's humid climate, the cardboard has held up remarkably well, Pat says.

Similar signs are being prepared for the coastal area of the park where the standard colors are ocean blue and gray. Recent and recurring lava flows in that area make such a changeable format desirable.

As the situation stabilizes, the picture frame signs are replaced with more permanent routed wood signs or even glass displays.

These temporary signs cost about $50 for the first installation, and changes cost about $5. A comparable routed wood sign costs from $200 to $250.

COST BREAKTHROUGH IN METAL SIGN PREPARATION

It has always been considered necessary to prepare metalphoto copy on the order of one-third to one-half larger than the desired final image size in order to preserve an acceptable standard of "sharpness" and clarity. The cost of preparing narrative material in camera-ready copy 3/4" to 1" high for this purpose is high. So, large narrative metalphoto signs for roadside and trailside use have not hitherto been considered economically feasible.

The present breakthrough in production costs (approximately 74% below the cost for cast aluminum signs) was achieved by Glenn L. Hinsdale, park historian, Richmond National Battlefield Park, Richmond, Va. He showed that high quality 18-point printer's copy (about 1/4" high) can be successfully enlarged and transferred to metalphoto plates because the high-contrast photographic steps involved and the high-contrast copy employed effectively cancel the image-degradation normally experienced in extreme photo-enlargement. A 300% enlargement of copy has been achieved with excellent visual and technical results.

An example cited showed a price differential of ten in the printer's quotation between 18 point (1/4" high) and 70-80 point (1" high), or a dollar difference of $55.60 as against $556.

HELP STOP RUNAWAY POSTS

An idea to anchor trail sign posts has come from Donald M. Black, chief park naturalist at Joshua Tree National Monument.

The bottom of the post should be drilled with a 5/8" or larger diameter hole. Insert the post through a concrete block (at Joshua Tree, 8" x 8" x 8" blocks were used). A section of steel, 1/2" wide is then put through the post hole. Mr. Black suggests using bond blocks, as they have an open slot that can drop down over the rod to help keep it from turning.

Tamp small rocks around the pipe and inside of the hole in the block. If the post is to be permanent, add a small amount of concrete.

To remove the post, if necessary, dig down to the steel rod and remove it from the post hole, leaving the post free to be pulled out.

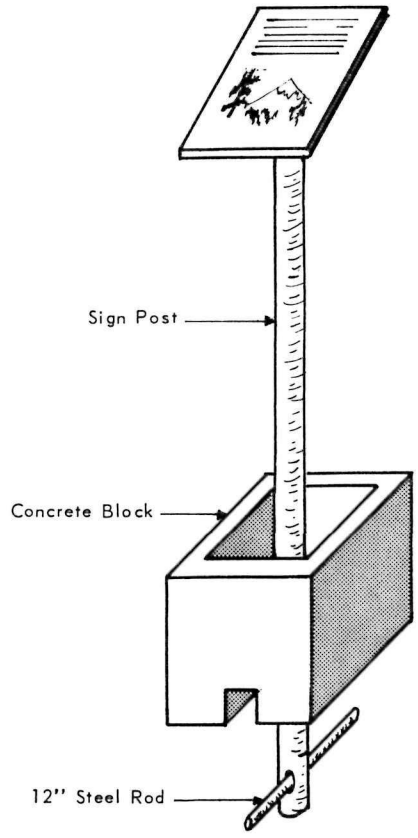

PROPOSAL FOR PUBLICATION

I wish to submit material for publication in DESIGN _____ (Check) GRIST _____ (Check) Date: _____

Subject or Title _____

Description _____

Attach additional sheets if necessary.

If a saving of time, money or effort, how much? _____

Cost of Materials and source _____

Contributor(s) _____
Include address, park, recreation area or organization

Author(s) or Designer(s) _____

Please include any illustrations - plans, rough sketches, charts and/or photographs. _____

Attach additional sheets if necessary.

Cut along this line to detach.

Fold and mail(address on reverse side).

STAMP

Zip.

Chief, Division of State and Private Assistance
National Park Service,
U.S. Department of the Interior
801 - 19th Street , N.W.
Washington, D.C. 20240

RECIRCULATING CHEMICAL TOILET

The Forest Service, U.S. Department of Agriculture evaluated recirculating chemical toilets in the laboratory and field over a two-year period. During this time, evolutionary changes and product improvements by Monogram Industries, Inc. have resulted in a new generation of manually flushed, fiber glass housed toilets called Jet-O-Matic 1000FE-P.

Evaluation showed that because of increased capacity (1000 to 1150 flushes), improved access for cleanout, and elimination of the electrical system (cause of virtually all previous failures) this new unit is superior to the 1000FE series. Other specific product improvements are: nonwarping reinforced door, all stainless steel hardware, stainless steel bowl with "knock-down" stainless visibility barrier instead of rubber boot, and provisions for padlocking.

The flushing cycle is started by completely depressing the foot pedal (a 35-pound child can operate), forcing a hydraulic solution from the actuator pump into the flush pump, located in the toilet holding tank. Hydraulic power operates the flush pump which forces filtered flushing liquid into the bowl to clean and flush collected waste into the tank. At the same time a chemical, MC 1000, is released from the chemical reservoir by actuation of the chemical metering pump. The chemical, which acts as disinfectant, deodorant, and detergent, is subsequently metered into the toilet tank. After the flush cycle is completed and pressure is removed from the pedal, return-springs on pedal and flush-pump reset the pedal. The flush pump draws liquid through a pin and grid filter to provide fresh, filtered liquid for the next flush cycle.

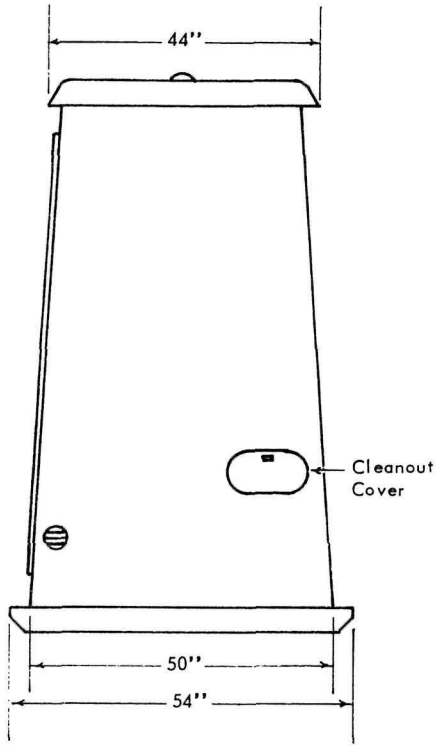

SIDE VIEW

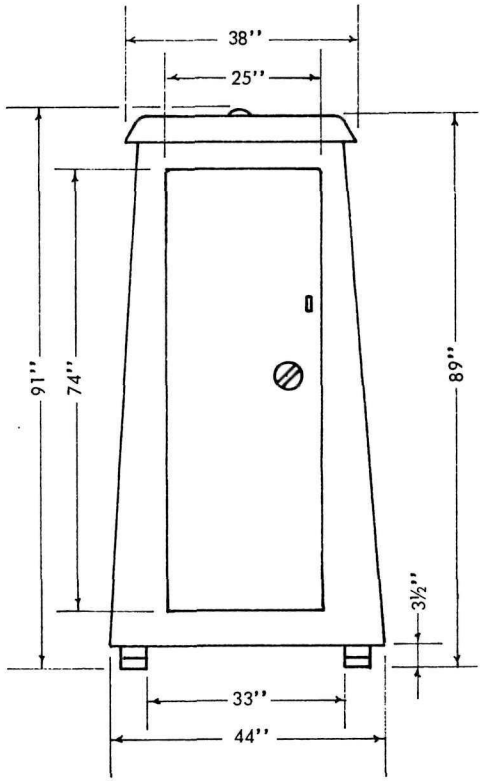

FRONT VIEW

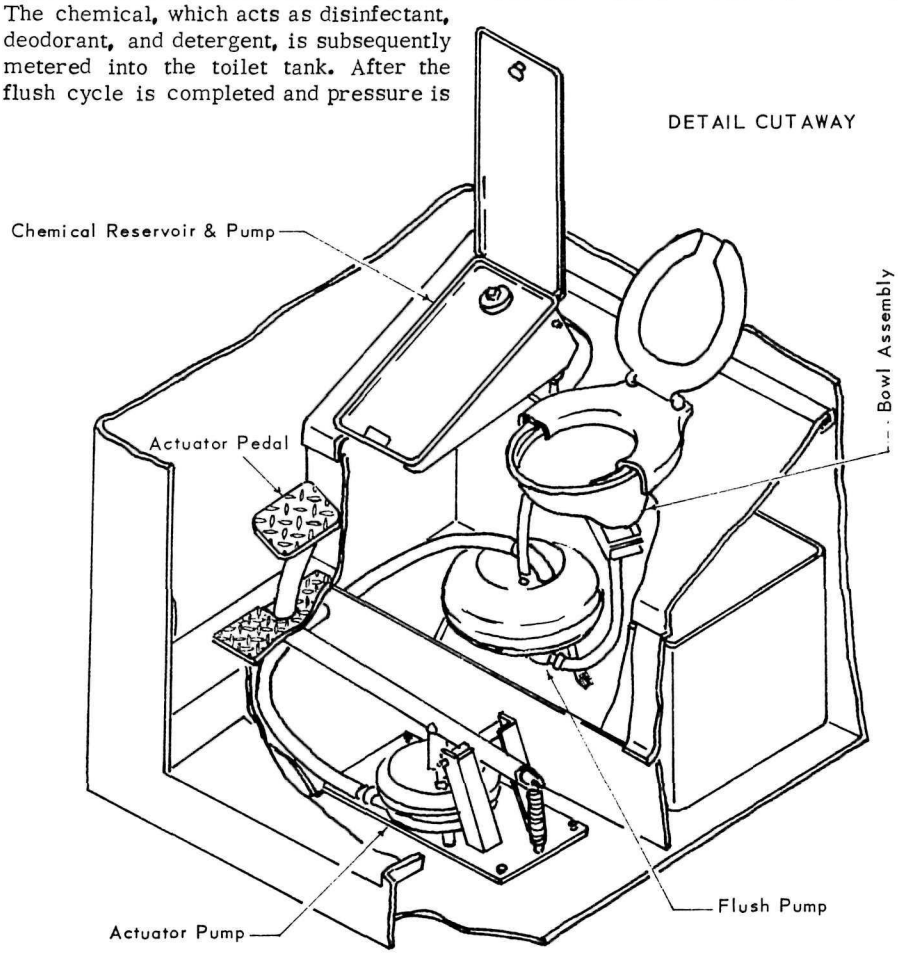

Government base price is $995 F.O.B. Los Angeles, California (full freight allowed on multiples of 16 only). Order from Monogram Industries, Inc., 6357 Arizona Circle, Los Angeles, California 90045.

This information is from Equip-Tips, June 1971, Equipment Development Center, Forest Service, U.S. Department of Agriculture, 444 East Bonita Avenue, San Dimas, California 91773.

DISCOURAGING MUD DAUBING SWALLOWS

Swallows come back to Capistrano and to Big Hole National Battlefield, but they don't build nests on inhabited buildings at Big Hole any more. Elroy W. Bohlin, management assistant, put a stop to that, for the daubed mud nests are not only unsightly, but are a health hazard as well because the birds are lice carriers.

After trying several unsuccessful methods, Elroy placed plastic strips about a foot wide over the areas where the swallows were trying to build. Thumb tacks placed about a foot and a half apart keep the plastic from sagging and prevent the wind from catching it.

The strips must be put up at the first indication of mud home building by the birds and kept in place until the end of the nesting season. The strips can then be removed, rolled up, and stored for use the next season.

CRAFT IDEAS FOR STATE PARK RECREATION AREAS

Two items in School Arts Magazine, September and November 1970 issues, may be of interest to State Parks recreation personnel.

PRINTMAKING

Art Supervisor Betty Tisinger, Roanoke (Virginia) City Schools, suggests reviving the old art of printmaking. There is growing interest in this area, and contemporary artists are focusing on the graphic processes, which, incidentally, have considerable commercial possibilities.

The article describes the discovery of a scrap item which could be used as a printmaking plate. This is the way the author tells it.

"A walk through the produce department of a local grocery store led us to a scrap product that has greatly enriched our graphics units in both the elementary and high school art programs. The trays on which produce is packaged looked like an excellent plate for printmaking. We tried it. The results were better than we hoped!

"In some cases students were asked to bring trays from home. However, we found that the grocer was willing to sell the trays...that for less than a dollar we could have ample plates for several classes. The size varies and in some cases we cut the larger trays into smaller plates. The sides were cut away first- and saved for "scrap" printing.

"Plates can be glued to a scrap of cardboard, using rubber cement, for ease in handling as they are very pressure sensitive and oil from fingers may make them resistant to ink.

"We found that the plate could be worked on directly with almost any tool. A pencil gave one line while a straight pin gave another. In some cases designs were worked out in advance; while in others the student worked directly on the plate.

"Printing was accomplished by using printer's ink and a brayer. Paper was then placed on top of the plate and rolled with a clean brayer. The pulling of the print was as exciting a moment for the high school student as it was for the elementary pupil."

MULTIPLE WEAVING UNIT

Paul A. Newell, Director of Art, Vestal (N.Y.) Central Schools, notes that art teachers often have a problem of inadequate working station space for each student. This is the way he created a multiple weaving unit.

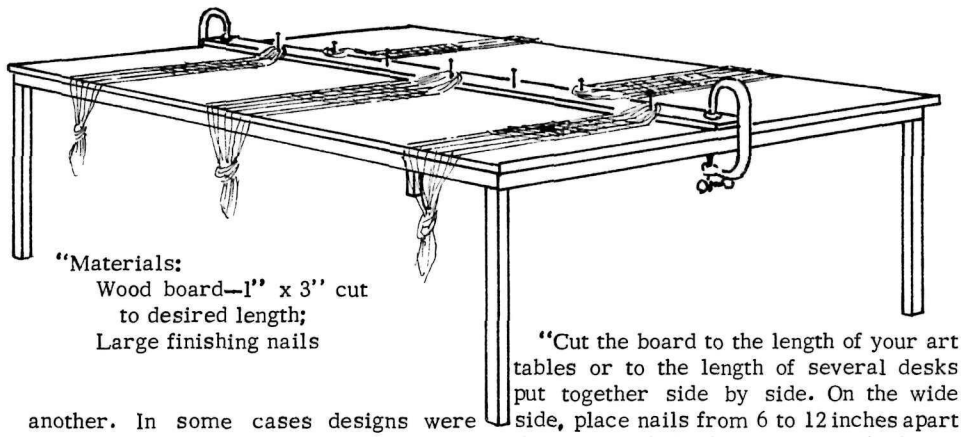

"Materials:
Wood board—1" x 3" cut to desired length;
Large finishing nails

"Cut the board to the length of your art tables or to the length of several desks put together side by side. On the wide side, place nails from 6 to 12 inches apart the length of the board. Clamp the board on to the center of the table or desks.

"Weaving projects such as finger weaving, straw weaving, tongue depressor loom weaving, and the like may be hooked onto the nails from both sides and held taut by the student."

MULCHING WITH HARDWOOD BARK

Fall application of hardwood bark mulch helps maintain an even soil temperature to prevent plant damage caused by alternate freezing and thawing. Mulching at this time of year will also delay growth of tulips, daffodils, and other early spring flowers just long enough to safeguard them from spring frost. This mulch can be applied almost any time of year. Spring applications help conserve soil moisture plants need during dry summer months and help suppress weeds as well.

Application is relatively simple and requires no special tools. For trees and shrub beds that have not been mulched before, it is best to begin by removing sod to a depth of 2 inches around trees and shrub beds. Remove sod a minimum of 18 inches around small trees, but take it from a wider area around larger trees and shrub beds. This not only gives a neat appearance, but makes lawn cutting and trimming easier.

Next, apply a 3-inch layer of mulch (make it 4 inches for weed control). The easiest way is to empty the bags directly onto the area to be mulched. An ordinary garden rake will satisfactorily level the mulch and push it into hard-to-reach places.

Hardwood bark mulch may also be used to make paths and walkways and as a surfacing material under children's playground equipment. When used along sidewalks and driveways it keeps back the grass, reducing hand trimming. A border of bark along the sides of a building will prevent mud splattering. It also makes good bedding material for animals.

The bark is generally available in clean, easy-to-handle bags containing 3 cubic feet of mulch—enough to cover 36 feet to a depth of 1 inch. Larger quantities are available in truck-load amounts in some areas.

This information is from Forest Science Photo Story, No. 3, publication of Northeastern Forest Experiment Station, Upper Darby, Pa. 19082.

QUIET MOWER

The noise of conventional power mowers is not in keeping with the atmosphere of earlier times which park personnel strive hard to create at historic sites. This led the Southeast Regional Office Evaluation Team to recommend that Appomattox Court House National Historical Park, Appomattox, Va., find a quieter way to mow the grass. The search brought Maintenanceman Henry Chernault and Maintenance Foreman Ray Godsey to the tractor shown in the photo.

The General Electric Elec-Trak has a front-mounted mower with a 42" cut. The E20 Model, with six heavy duty batteries, has 16 HP and will mow grass for over four hours on a single overnight charge. Chernault and Godsey say that the tractor has many safety features, handles easily, and does not pollute the air. Elec-Trak may also be used for snow removal, towing, and with plug-in power tools such as edgers, trimmers, and saws.

For more information see your General Electric dealer or write to General Electric Company Outdoor Power Equipment Operation, Corporations Park, Bldg. 702, Schenectady, N.Y. 12305.

Superintendent F.A. Gould says that sheep, goats, and horses at Appomattox help control the grass—and they're fairly noiseless, too.

HOIST LESSENS HAZARD IN GLASSMIX LOADING

One of the crafts which are demonstrated at Colonial National Historical Park is glassmaking. The raw glass-mix, or batch, is prepared in the mixing room at the Jamestown Maintenance Area. It is transported in 600-pound barrels, which until recently were loaded by hand. This operation required at least three men working about 30 minutes a week, and it was an extremely dangerous job.

Glassblower Gerald E. Vandermark suggested installation of an electric hoist which enables one man to handle the loading operation. It saves time costs, but even more important, it greatly reduces the hazard to personnel.

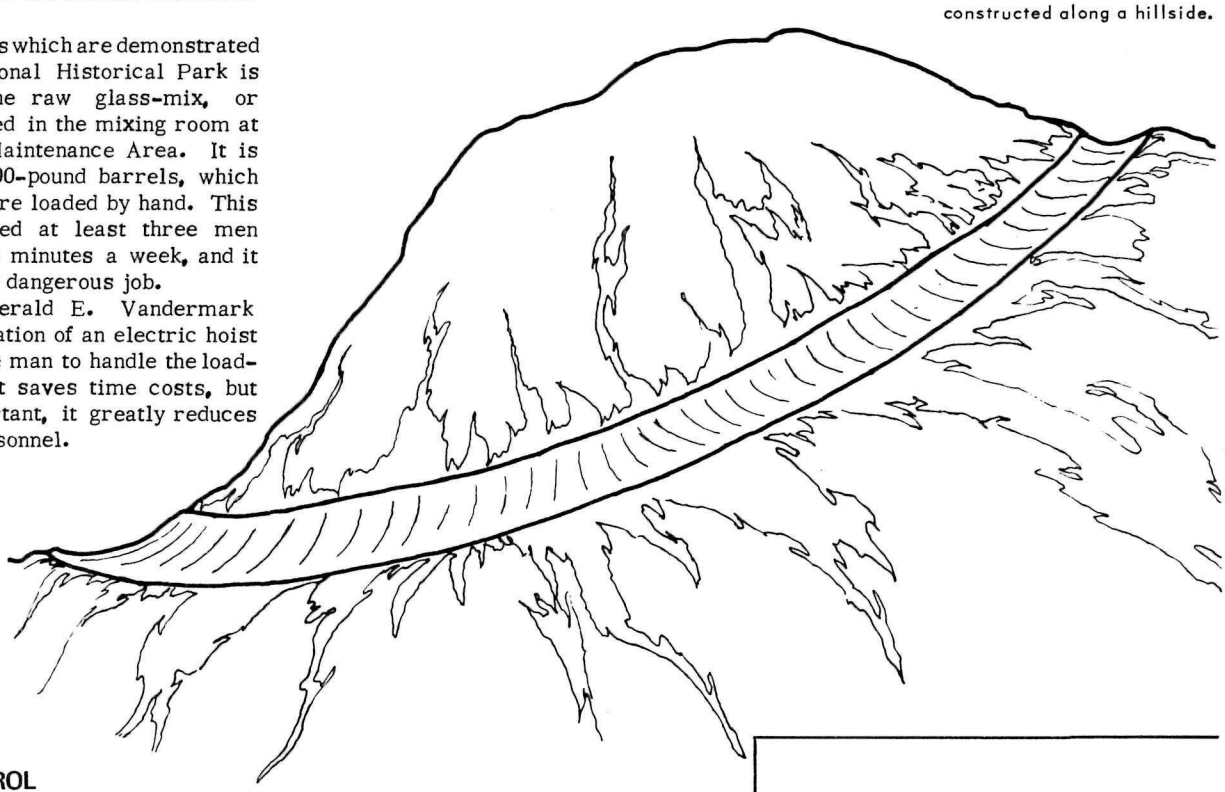

Typical walk and channel constructed along a hillside.

EROSION CONTROL

Outdoor Laboratories at Southern Illinois University are located in areas having relatively steep topography with easily eroded soils. Walkways in some of the problem areas have been constructed of asphalt or flagstone with concave centers (see sketches). They serve as channels to carry water down to a point where it can be safely diverted away from the slopes.

Lowell Solterman, assistant to the coordinator at Southern Illinois, reports that the device has been helpful in controlling erosion there.

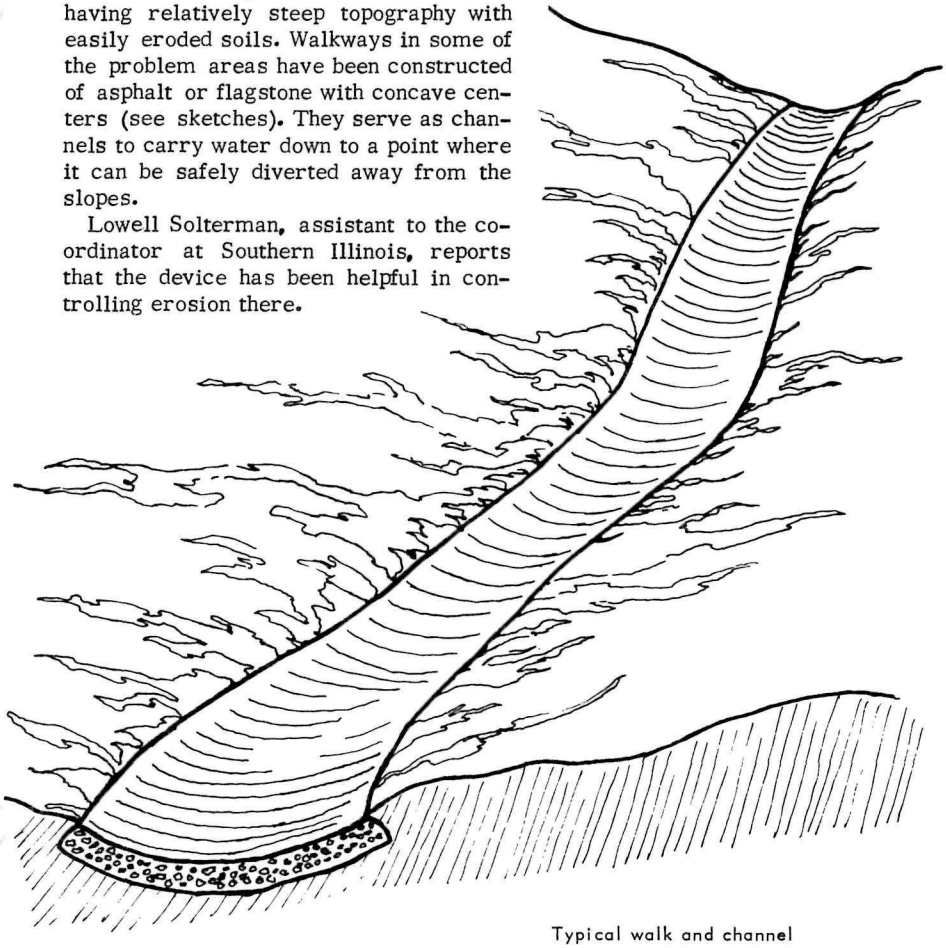

Typical walk and channel down a hill slope.

NEW STRONG ADHESIVE

A new adhesive, which makes strong bonds between many non-porous surfaces in seconds, has been introduced by the 3M Company. The product is called Scotch-Weld Structural Adhesive RTC3810 & Primer (Adhesives, Coatings and Sealers Div., 3M Co., St. Paul).

It comes as a small aerosol spray can of primer plus a plastic tube of the adhesive proper. It's for use only on smooth, close-fitting surfaces that are clean, dry and free of paint or rust.

To use it, you spray the surfaces with the primer, wipe them dry and respray. You then have up to 30 minutes to apply the adhesive. A single drop of adhesive goes on one of the surfaces to be mated. A drop covers as much as one square inch.

Once the drop is applied, you have no more than six seconds to mate the parts. And you have no more than 10 seconds after you close the assembly to tap them together sharply with a mallet (to mix primer and adhesive). Then hold or clamp the pieces together for a brief spell and wipe off any excess that squeezes out at the joint (easily done, since it does not harden).

Joints will usually fail when the materials are porous as the adhesive cannot harden if there is any air where the faces join.

The kit can be ordered by mail as Cat. No. C-1698x, Kit A, from Scientific Glass Apparatus Co., Inc., Bloomfield, N.J. 07003.

The above is quoted from Consumer Reports, Feb. 1971, p.65.)

THE ROKON TRAILBREAKER

The Trailbreaker, which looks like a cycle or a scooter with oversized tires and wheels, is designed to be an all-terrain vehicle that can carry a driver and a payload where ordinary vehicles cannot go, in swamp, desert and mountains. To attain this capability, the Trailbreaker has many unique features, the most outstanding being two-wheel drive. The Trailbreaker is available in two models, the Mark III, which has 15-inch wheels, and the Mark IV, with 12-inch wheels.

Both models are powered by a two-cycle Chrysler engine that develops 8 hp at 7000 rpm. The Trailbreaker has an automatic clutch, and a three-speed transmission that is shifted by a handlever. Top speed is 25 mph for the Mark III, 30 mph for the Mark IV.

They can both be driven under good control as slow as one-half mile per hour. The throttle is controlled by a twist grip on the right handlebar; both brakes are actuated by a squeeze lever on the left handlebar. The main fuel tank holds two gallons, enough for eight hours of operation. The Trailbreaker has both a kick starter and a rope pull starter.

USDA, Forest Service Equipment Development Center in Missoula, Montana, has used the Mark III since 1964 and the Mark IV for nearly one year. Their evaluations indicate that the vehicle develops far more drawbar pull than a cycle or a scooter, and has a much better capability for climbing steep slopes and for pulling loads.

Where trails are very poor and where some cross-country travel will be required, the Trailbreaker is a better choice than either a scooter or a cycle. Examples of work suited to the Trailbreaker are locating roads, making range surveys, preparing timber sales, etc.

The Trailbreaker is the only two-wheeled vehicle the FSED Center has found that is practical for towing an implement or a loaded trailer. For this work it must be fitted with a three-point hitch and special gear reduction, and it must be driven by an experienced operator. Detailed instructions for modifying the vehicle are available from the Center.

This is a rugged, durable vehicle, requiring little maintenance and repair, compared to other two-wheeled vehicles. It is designed so that if one component fails, another will provide backup, permitting the driver to continue under power. The machine has two starters and the tires are designed to support the vehicle even when punctured. Extra fuel can be carried in the wheel hubs of the Mark III.

The Trailbreaker is manufactured by Rokon, Inc., Keene, N.H. 03431. A list of dealers, accessories and prices is is available from the manufacturer.

(The above article was quoted from the EQUIP-TIPS, February 1971, a publication by the USDA, Forest Service Equipment Development Center in Missoula, Montana.)

LIGHTWEIGHT BLEACHERS AVAILABLE

Stadiums Unlimited, Inc., has announced the availability of Alumn-a-Plank portable bleachers.

Alumn-a-Plank weighs 1/3 less than conventional wood seat and footboard bleachers. It is available in either 3-row or 5-row models, in lengths of 15 (standard), 21 or 27 feet.

Portable, snag-free, sturdy, economical, and maintenance free, they can be converted into modular grandstands with the use of aluminum box frames, also available from Stadiums Unlimited.

For those areas already having bleachers and stadiums, with wooden seats, the Company suggests Alumn-a-Cover. The anodized surface never deteriorates and never requires maintenance. At the same time the wood can breathe and further deterioration is prevented.

Alumn-a-Cover is cooler than wood, reflecting 95% of the sun's rays. Each order is custom fabricated for seat width, and installation is simple.

For further information on these and other aluminum products, write Stadiums Unlimited, Inc., Box 374, Grinnell, Iowa 50112.

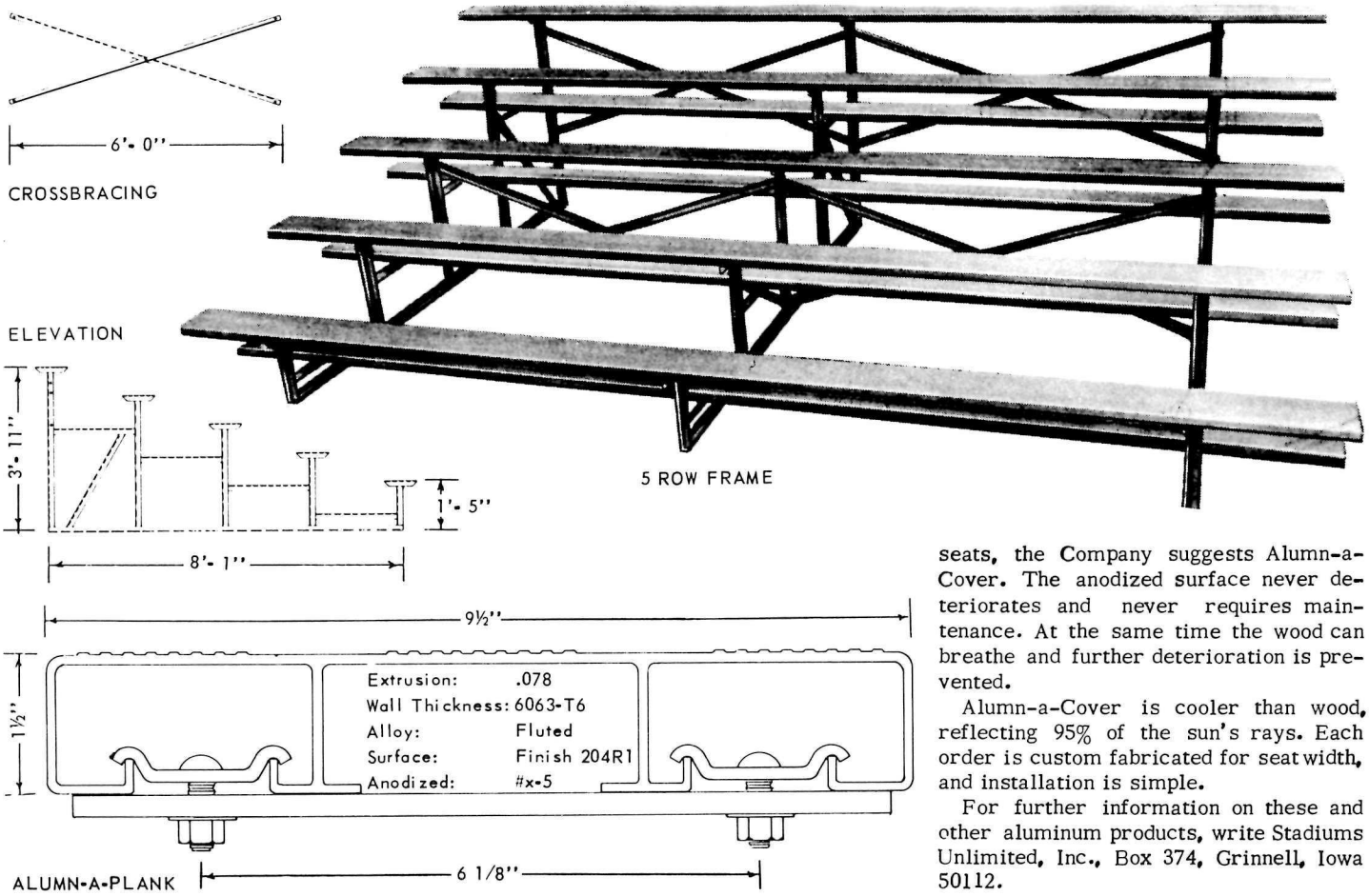

BLUE DOMES FOR BLUE RIDGE PATROL

Patrol cars at Blue Ridge Parkway were equipped with a clear dome covering one clear and one blue light making 35 revolutions per minute. Park Ranger Douglas Bowen found that this combination was not very effective in stopping motorists—it just didn't catch their attention, nor did it signify an official or emergency vehicle to them. Daytime car-stops were particularly difficult because the blue light did not show up at all; while at night the blue light was just adequate.

Doug tried two blue bulbs; that was worse. Then he tried putting a blue lens over the spotlight, but this was inadequate since it provided light in only one direction and did not catch driver attention. Also the full power of the spotlight is too essential on night patrol to be reduced in any way.

Of the different combinations and variations which were tried, the best seemed to be two white lights and replacement of the clear dome with a blue one (cost, $5). This brought the vehicle up to the standard of the North Carolina Highway Patrol which also uses blue domes and white lights. A blue light is flashed about once each second (twice the speed of the old light). The blue dome signifies an official car, more illumination is gained both day and night, and Doug finds car-stops easier. He does say that there have been a few times on a very bright sunny day when drivers failed to notice the light right away, but that a quick tap on the horn catches the driver's attention.

CHECKLIST FOR ACCURACY IN PERSONNEL ACTIONS

With innumerable forms to be completed for each employee upon appointment or termination, there is abundant opportunity for error or omission.

Amelia E. Mulloy, clerk-typist, Mount Rushmore National Memorial, prepared a checksheet for appointments and one for terminations on which she placed a column for the name of the employee, one for the reporting date, and columns following for the titles of each of the required forms or actions. She then devised a color code which would indicate whether the form had been mailed (or completed), received, or whether special attention was required.

An instant check is now possible on forms or actions completed or not. In addition to eliminating confusion, the checklist is said to have improved accuracy.

TEMPLATES FOR PARKING LOT LAYOUT

Free for the asking is a new set of six parking lot layout templates from Maintenance, Inc., manufacturers of Jennite J-16 (a surface seal widely used for asphalt and black top pavements).

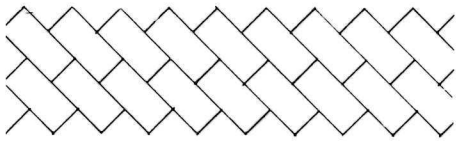

45° Parking Layout Template

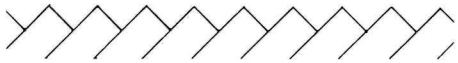

The templates are suitable for planning practically any type of parking arrangement, but are especially adaptable to industrial plant or public building lots. Two templates provide for 45 degree parking, 2 for 60 degree, and 2 for 90 degree. Each permits safe, convenient placement of the maximum number of cars in any area. Scales are 1-inch to to 20 ft. and 1-inch to 50 ft.

A set may be obtained from the local distributor of Jennite J-16 (in most principal cities) or by writing to Maintenance, Inc., Wooster, Ohio 44691.

APPOINTMENTS 1970

COLOR CODE
— Mailed or Completed
— Received
— Special Attention

NAME	Reporting Date	SF-52 File, Reg., Payroll	SF-61 & 61B Appointment A88	SF-58 to 171	Eng. Form 3898 Request, Mailing	Eng. Form 4175 Withholding Tax	Eng. Form 3901 Qtrs. File 7423	10-375 Assign Qts. Reg., File, Employ.	Meter Reading File 54 $25. Deposit '71	Inventory of Apt.	Meter Deposit	Apartment #	DI - 105	Uniform Allow. F-54	Name Tags S-94	Bonding F-46	Drivers Permit P-5619 Check Exp. Date	Copy of Position Description	Supts. Equal Employment Policy	Orientation Folder	Proper Work Clothing	Contiguous to Area (must Accompany 32)	SF-85 Returner	SF-87 One Time Only	Proper Attire	Employee's ID	Driver Reg. HS-1047	SF-50 Returned From Reg.
Jordan, Arnold C.	3-8-70	X	X	X	X	X	—	—	—	—	—	—	X	X	X	—	X	X	X	—	X	X	—	—	X	X	X	X
Lykes, Ira	3-8-70	X	X	X	X	X	—	—	09411	X	X	6	X	X	X	—	X	X	X	X	X	—	—	—	X	X	X	X
Williamson, Bud	3-8-70	X	X	X	X	X	X	X	10923	X	X	1	X	X	X	X	X	X	X	X	X	—	—	—	X	X	X	X
Robertson, Orville	3-8-70	X	X	X	X	X	—	—	—	—	—	—	X	X	X	—	X	X	X	X	X	—	—	—	X	X	X	X
[illegible]	[illegible]	X	X	X	X	X		—	—				X	X	X		X	X	X	X	X	—	—	—	X	X		X

TERMINATIONS 1970

COLOR CODE
— Action Required Completed
— Special Attention

Terminations NAME	Termination Date	90 Day Qualifying Period	Lump Sum	Code	Pay	Supervisor	Minority Group Code	Eng. F-3898 Request to Mail	Eng F-3901 Quarters	SF-52	10-160 (1)	10-153 (2)	SF-8	DI-105	Notify Power & Light	Minority Group Statement	Change of Address	Orientation Folder Returned	Seasonal Info. Booklet Returned	FORWARDING ADDRESS
Becker, John	6-13-70	8-14-70	—	352 Term.		Bill	—	—	—	X	X	X	X	X	—	—	—	—	—	Keystone, South Dakota 57751
Thompson, Gary	6-13-70	—	—	472 Fuel.	6,048 65-4	Leo	—	—	—	X	—	—	X	X	—	—	—	—	—	Keystone, South Dakota 57751
Tuttle, Jan	8-14-70	9-5-70	—	317 Reig.	5,353	Leo	—	X	—	X	X	X	X	X	—	—	X	X	X	Gillette, Wyo. % Campbell Co. Sch. Dist. 82716
Sabert, Mel	8-23-70	8-29-70	X	352 Term.	Ph 1.60	Bill	—	X	—	X	X	X	X	X	—	X	—	—	—	722 Allen Ave. Rapid City, S.D. 57701
Sunshine Bob	8-30-70	9-28-70	X	352 Term.	Ph 1.66	Bill	—	—	—	X	X	X	X	X	—	—	—	—	—	Box 393, Hill City, S.D. 57745
Davis, Richard	9-4-70	—	X	352 Term.	Ph 3.36	Bill	—	X	—	X	X	X	X	X	X	X	X	—	—	416 E. Watertown Rapid City, S.D. 57701
Condale, Jim	9-12-70	8-29-70	X	352 Term.	Ph 2.79	Bill	—	X	X	X	X	X	X	X	X	X	X	—	—	c/o Leo Gannon Martin Martin, S.D. 57551
Faberge, Matt	9-14-70	9-13-70	X	352 Term.	Ph 2.91	Bill	—	—	—	X	X	X	X	—	—	—	—	—	—	Box 317, Hill City, S.D. 57745
Huff, Francis	9-14-70	—	—	472 Fuel.	7,790. 65-6	Leo	—	—	—	X	X	X	X	X	—	—	—	—	—	3813 Riverdell Dr. Rapid City, S.D. 57701
Green, Joy	8-26-70	9-5-70	—	352 Term.	6,548. 65-5	Leo	—	—	—	X	X	X	X	X	—	—	X	X	X	2619 Hofer Ave. Rapid City, S.D. 57701
[illegible]	8-29-70	8-29-70	X	352 Term.	6,599.														X	315 W. Main St.

PUBLIC INFORMATION ON SAMPLE COLLECTION POLICY

Frequent requests are received for permission to collect samples in national parks or for samples to be sent. Henry C. Warren, interpretive specialist, Lassen Volcanic National Park, Mineral, Calif., feels that there should be consistency and uniformity among all national parks in explaining the policy to the public.

Here is the text of the handout which he prepared for use at Lassen.

FOR FUTURE GENERATIONS

Each year the National Park Service receives numerous requests for permission to collect samples at the areas it administers. In considering these requests the Park Service is governed by a philosophy dating back to its inception.

The Congressional Act of August 25, 1916, which established the National Park Service directed it to: " . . . conserve the scenery and natural and historic objects and the wildlife therein and to provide for the enjoyment of the same in such manner and by such means as will leave them unimpaired for the enjoyment of future generations."

To comply with the above mandate, National Park Service regulations prohibit disturbing, molesting or injuring any formation, historical feature, animal or plant. The collecting of specimens is not permitted except when the samples are used for scientific research and then only with the written permission of the National Park Service and subject to strict controls. Collecting of rare specimens is not permitted under any circumstances.

With your understanding and cooperation, the National Park Service feels that it can make its unique features available for the edification and enjoyment of millions of people yearly and still leave them unimpaired for future generations.

IMPROVED TRAIL TRAFFIC COUNTER

Shortcomings of previous trail traffic counters have been overcome in a new one designed by electronics engineers at USDA, Forest Service Equipment Development Center. The 75-foot scanner range of the new counter gives fieldmen far more opportunity to use natural camouflage. It cannot be tripped by falling leaves, walking sticks swung by hikers, or other small objects, and it will not register more than one count for long objects like horses and cycles.

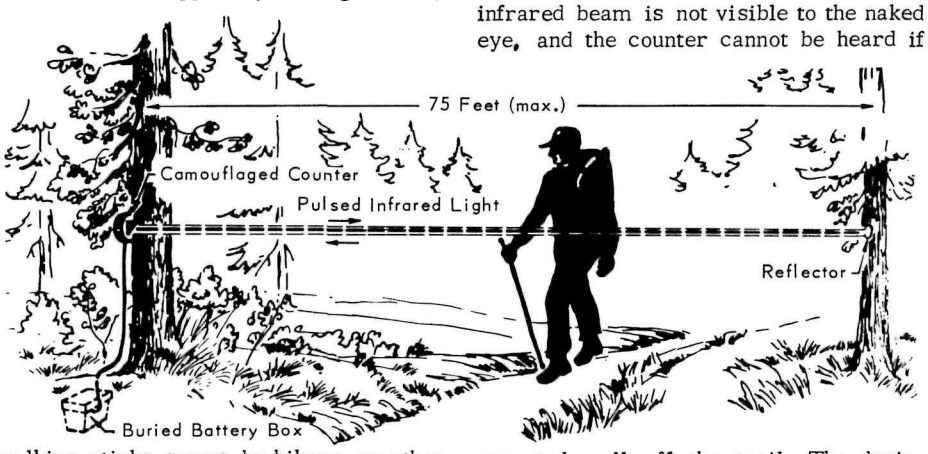

The counter consists of three components—a scanner that emits a narrow beam of pulsed infrared light, a three-inch reflector, and the power supply. The scanner is mounted on one side of the trail, the reflector on the other. Distance between the two can be up to 75 feet. The scanner sends a beam of light to the reflector, which reflects the beam to the scanner. When the scanner is deprived of a specific number of infrared pulses by an object passing between it and the reflector, a counter advances one digit. A buzzer can be switched on which will sound when the beam and reflector are properly aligned.

To discourage tampering and vandalism, the scanner housing is as small as possible and finished in dull camouflage. The infrared beam is not visible to the naked eye, and the counter cannot be heard if mounted well off the trail. The device will operate two to three months on one 6-volt carbon-zinc battery and two 12-volt batteries.

The counter is available through the USDA, Forest Service Equipment Development Center, Federal Building, Missoula, Montana 59801.

Information on this item is from Equip Tips, October 1970, a publication of the Development Center.

USES FOR LAGGING ADHESIVE—ARABOL

Experimental uses of Arabol, a lagging adhesive manufactured by Borden Chemical Company, are reported by David A. Hughes, NPS Office of Environmental Planning and Design, Western Service Center. Arabol was applied to a boat deck, cabin top and sides, and hull sides. Two latex paint colors were mixed with the adhesive as they would be mixed with paint (color additive quantity may differ as compared with paint). Paint was applied with a brush. Water is used for thinning and for cleaning brushes.

After three years of continuous exposure on the water, the paint colors showed little fading; moderate wear was noticed where foot traffic occurred; and no blistering or peeling was noticed elsewhere. Where a loose sample could be obtained, it still retained its resiliency.

Another trial was deck application using a burlap base. Burlap was laid over a wet coating of Arabol, allowed to dry and coated again. A good looking, slip-proof deck was the result.

A one-year field test conducted by the Park Service with five samples sent to five areas (Death Valley, Padre Island, Rocky Mountain, Yellowstone, and Olympic) showed Arabol to be an excellent coating with little to no color change. In one case, the steel sample rusted away, leaving the flexible paint layer.

Dave feels that Arabol could well prove to be far less expensive than paint as well as being a superior coating for wood, steel, and concrete block. Unlike many paints, it can be applied to a wet surface. Only time and many types of application will tell whether Arabol is truly superior to paint.

Borden makes no claims for Arabol when used as a coating other than that specified on the can. It is a milky white, glue base substance to be applied over white cotton duck as a pipe protection. Listed under #60-89-05, it may be purchased in one and five gallon lots from a building material supply company for about $4.45 a gallon, or a 5 gallon pot (@$3.90 a gallon) for $19.50. For additional information pertaining to the "lagging" use, write to Borden Chemical Company, 41100 Boyce Rd., Fremont, California.

EZ BRUSH SAVES TIME

To all people who paint, Maintenanceman William A. Richins, Dinosaur National Monument, suggests use of a little tool called EZ Brush. The working face of it is covered with mohair or lambs wool. Bill used the one with the wool face to paint ship-lap and found it to be a great time saver.

The crew found that painting residences and apartments went faster, too. Bill says that their maintenance supervisor is sure he covers two to three times as much area as he could with any other brush or roller.

By using wool bought for wax applicators they save money on replacement covers. The wool is cut in two and glued on the EZ Brush with contact cement.

OYSTER SHELLS—LEAVE'M

This year the Washington Department of Fisheries has instituted a new rule: You can have the wild oysters you get on the beach—BUT only the meat! You CANNOT take the shell home with you.

There are two reasons given for this:

1. To help oysters reproduce. (Up to a dozen young tiny oysters may be growing on a mature oyster shell; naturally taking the shell with you destroys the baby oysters as well as the big one you want.)

2. To discourage oyster rustlers. (There are many poachers on private oyster farms, as well as those taking too many on public land, and they don't like to be caught on the property shucking oysters. NOW they will take a risk either way—getting caught at the "scene" or in possession of the shells on dry land.)

Many of the public beaches have been picked virtually clean of the oysters, and commercial oyster farmers who have a large investment in seed, equipment and labor, not to mention the land, are complaining more and more about people who don't know or don't care whose property they are taking. Incidentally, leaving the shells on the beach applies to the commercial as well as the public oyster gatherer.

The State assures us that the oysters will be just as fresh IF kept in their own liquid at a temperature just above freezing. Under these conditions the oyster will actually stay alive for days.

Another alternative considered is for the State to have oyster hatcheries to seed public beaches, but this would probably require that the public get a license for oyster-picking, the same as fishermen do.

This item is taken directly from Howdy's Happenings, Vol. XI, No. 2, April-June, 1971, a publication of Good Outdoor Manners Association.

DUTCH ELM DISEASE CONTROL

Methoxychlor is a safe and economical substitute for DDT in control of Dutch elm disease, according to Forest Service research findings.

Two years of field studies in Milwaukee, Wisconsin, by Dr. Jack H. Barger, Forest Service entomologist, have demonstrated that spraying with methoxychlor either by helicopter or mist blower controlled the rate of disease incidence, while the rate of incidence increased in the plots not sprayed. From 1969 to 1970, the average incidence decreased by 32 percent in the helicopter plots, decreased by 34 percent in mist blower plots, and increased by 94 percent in untreated check plots.

Methoxychlor, which has been available for such use for years and is by test biodegradable and safe for birds and wildlife, has been less attractive than DDT for ground-level spraying with mist blowers because of its higher cost. Helicopter application of methoxychlor at a low rate shows promise of matching the cost of ground level spraying with DDT, Dr. Barger has reported.

Bioassays showed that residues persist for more than a year and that methoxychlor will also effectively control the European elm bark beetle when used as fall or spring treatment applied by mist blower or helicopter. Field studies further demonstrate that one gallon of 12 1/2 percent emulsion concentrate methoxychlor (1/2 pound actual) per tree applied in the spring by helicopter achieves the same result on rate of disease incidence in the field as was demonstrated with 2 1/2 times as much methoxychlor applied at the same time by mist blower.

Saturation treatment may not be necessary, and further tests are being made to determine what amount is required for protection.

This information comes from Forestry Research Newsgram. For additional information write: Hal Marx, 6816 Market St., Upper Darby, Pa. 19082.

EXOTIC PLANT ERADICATOR TOOL

Given the restrictions on pesticides for control of exotic plants, John R. Patterson, park manager, Bent's Old Fort National Historic Site, was looking for a fast way of eradicating the local exotic growth, tamarisk-salt cedar. He came up with the idea of making a tool from a subsoil cutter blade.

Reversing the discarded blade to use the good cutting edge, he cut two pieces, about 18 inches each, on an angle and then arc welded them to form a flat V. He slotted, or notched, the trailing edge and then welded two small plates drilled for bolts (see photo 1). These were bolted to the shanks on a tool bar connected to a three-point tractor hitch (photos 2 and 3).

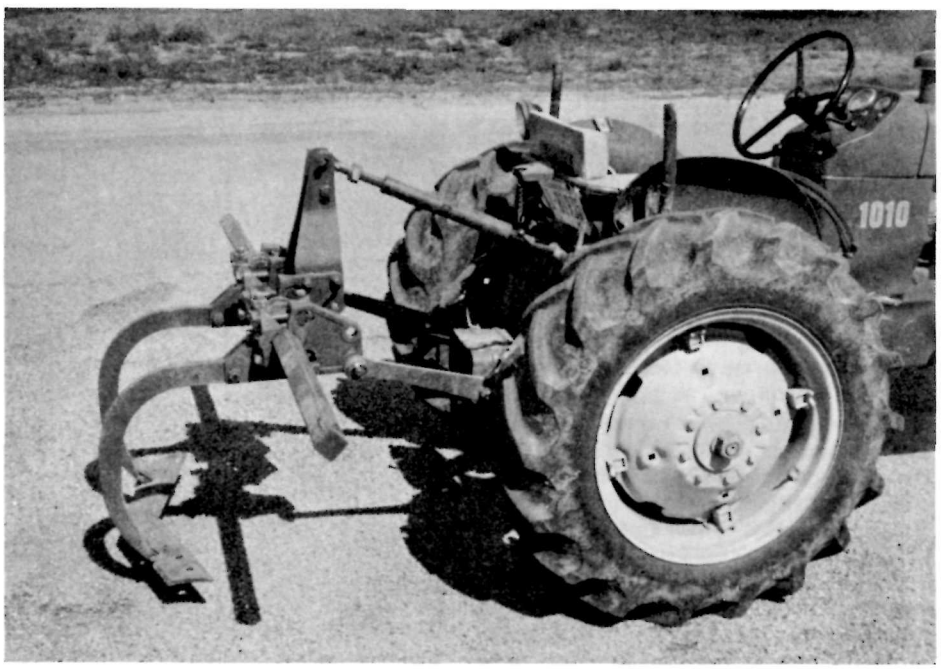

This attachment provides a fast and sure method of eliminating small plants with a trunk diameter of three to four inches and height of 10 to 12 feet. The blade works best, John says, if you lower it to the ground three or four feet before you approach the plant and continue lowering until you make contact with the plant roots about two feet below ground level. The method is safe and permanent. He figures that the cost is about a third of the cost of pesticide use.

AIR CURTAIN CONTROLS POLLUTION FROM OPEN PIT INCINERATOR

Open burning of refuse (defined as garbage, rubbish and trade waste including wood, tree branches, leaves, etc.) in designated areas has been restricted by regulation of the Pennsylvania Department of Health since January 28, 1969. In accordance with the restriction, Pennsylvania Department of Transportation (PennDOT) indicated to contractors that on future projects, contracts would provide for disposal of clearing and grubbing refuse by means other than open burning. Subsequent costs for disposal within the designated area rose five to six times due to additional hauling expense, purchase or lease of chipping equipment, and costs associated with special permits for use of land fills.

The Allegheny County Health Department, Bureau of Air Pollution Control indicated in August 1970, that it would permit use of the "Air Curtain Destructor" for burning trees and brush on highway projects if design of the unit met specifications outlined in an article which appeared in Highway Focus, February 1970.

The Pennsylvania Department of Health, Bureau of Air Pollution Control, advised PennDOT that operation of open pit incinerators for destruction of wood waste generated by land clearing and grubbing operations associated with highway projects located within and outside the designated Air Basin areas would be permitted provided that the incinerators were properly designed, located, and operated.

With this permission and in view of the costliness of disposal methods other than burning, PennDOT and the J.A. Jones Construction Company jointly experimented with a simplified version of the "Air Curtain Destructor." A plenum was constructed, using a 1 1/2-inch diameter pipe, 18 feet long with 3/8-inch diameter nozzles spaced every foot throughout the length of the pipe. The pipe was located along the top edge of an earth pit measuring 8 feet wide, 20 feet long, and 10 feet deep with the nozzles aimed across the top and angled slightly downward into the pit. Air was supplied by two air compressors at a rate of 1200 cubic feet per minute. Smoke emissions which would normally escape into the atmosphere are directed downward into the pit by the high velocity air curtain, thus creating a very efficient, smokeless burn.

More refined units have since been developed for several contractors working for PennDOT by the Thermal Research and Engineering Corporation, Conshohocken, Pennsylvania 19428. Telephone: Area Code 215, 828-5400. Six units have been approved by the Bureau of Air Pollution Control and are functioning to the satisfaction of all in PennDOT.

This information comes from Harold H. Huber, special assistant for environmental quality, PennDOT.

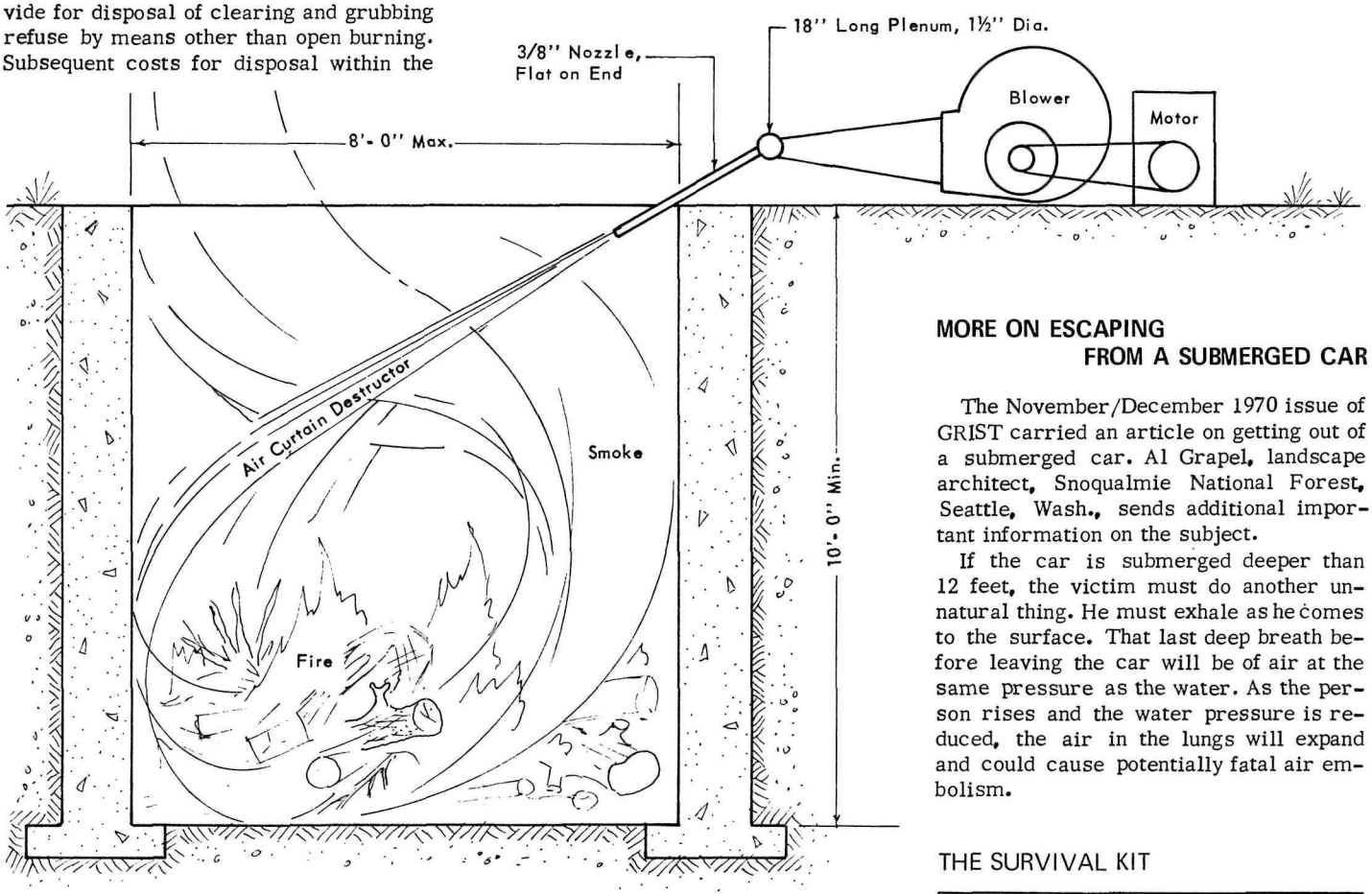

SOS—Our index-maker wants some new park and personnel names to index! Seems the ideas are all coming from the same few places. This tends to make indexing a little repetitious. We think there must be a lot of ideas hidden around in other places. Please send 'em in and keep our indexer happy. (We get her for half-price.)

MORE ON ESCAPING FROM A SUBMERGED CAR

The November/December 1970 issue of GRIST carried an article on getting out of a submerged car. Al Grapel, landscape architect, Snoqualmie National Forest, Seattle, Wash., sends additional important information on the subject.

If the car is submerged deeper than 12 feet, the victim must do another unnatural thing. He must exhale as he comes to the surface. That last deep breath before leaving the car will be of air at the same pressure as the water. As the person rises and the water pressure is reduced, the air in the lungs will expand and could cause potentially fatal air embolism.

THE SURVIVAL KIT

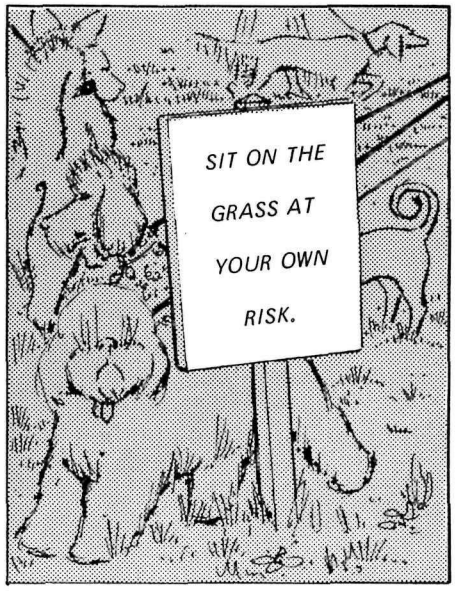

by Tom DeHaven & Jim Burnett