DEPARTMENT OF THE INTERIOR

NATIONAL PARK SERVICE/
NATIONAL CAPITAL REGION

BIKEWAY PLANNING & DESIGN MANUAL

The principal purpose of this manual is to assist the National Capital Region Division of the National Park Service in planning and designing new bicycle facilities as well as improving and maintaining existing facilities. While this manual is adapted from other similar manuals,[1] its contents have been updated to reflect current knowledge of bicycle facility planning. One should recognize, however, that the "state of the art" of this subject is continuing to evolve with innovative ideas, guidelines, and design standards. The National Capital Region staff involved in the bikeway planning, design, construction, and maintenance processes will need constantly to monitor new developments as they occur.

[1] Sources: (See Bibliography in Appendix)

TABLE OF CONTENTS

GRAPHICS

TABLES

CHAPTER 1 INTRODUCTION

The following presents an operating manual for the planning, design, construction, and maintenance of bikeways in the National Capital Region (NCR) of the National Park Service. This manual has been prepared so that one uniform set of guidelines can be used as a basis for bikeway development throughout the National Capital Region.

Generally, trails in the NCR should provide recreation facilities for a variety of users. All the trails in the region should at a minimum provide hiker-biker facilities.

1.1 PURPOSE OF MANUAL

This manual has three major purposes. The first purpose is to provide the NCR Area superintendents with a systematic approach to bikeway planning, consistency of design and construction standards, and continuity from one superintendent to the next. Since it is understood that superintendents change positions frequently, this manual will provide them with a document to use as a planning tool for bikeway efforts in their areas.

The second purpose of this manual is to provide uniform design and construction standards for technical personnel involved in planning and design of bikeways. At present, design standards are derived from a variety of sources which may be internally inconsistent with each other. This manual will serve as a major source of information in one document which can be used throughout the NCR and will insure consistency in bikeway design efforts.

The third purpose of the manual is to provide a background for maintenance personnel for upgrading and maintaining trails. The Chief of Maintenance in each area provides considerable continuity, for he/she is less likely to relocate as frequently as the Park Superintendent. Therefore, this manual should be used on a regular basis both to upgrade existing trails and to develop plans for the construction of new trails. In addition, it will provide information on monitoring procedures which will help the crews operate and maintain bikeways effectively.

1.2 HOW TO USE MANUAL

This manual is divided into sections according to subject area. Each of these subjects is subdivided into specific areas which discuss in detail a particular aspect of design, construction, or maintenance of bike trails. The detailed Table of Contents is the basic guide to the overall subject areas as well as the

subsections. It should be referred to when seeking information on a particular topic.

CHAPTER 2 GOALS & OBJECTIVES

An understanding of goals and objectives can assure that bikeway facility design and construction details have overall coherence and are rational for an entire bikeway system. Goals and objectives are crucial planning guidelines for future bikeways. They provide a framework in which to make decisions regarding bikeways in the NCR. They can help to define bikeway priorities regarding what sections of trail should be built next, where they fit in relation to the entire system and what appropriate construction details are to be used. In addition, goals and objectives are useful in evaluating the resolution of NCR bikeway issues as they arise.

2.1 RECREATIONAL BICYCLING

Concepts of recreation vary, and recreation forms may conflict with each other. Recreational biking can take various forms. The first consists of family outings in which younger and less experienced bicyclists participate. The pace at which such groups move is usually quite slow and there is greater tendency to spread out on the path. Touring provides a second form of recreational biking; touring bikers have a particular destination in mind and usually maintain a constant rate of speed.

The third type of recreational biker is the speed biker who has definite mileage goals in mind and who expects to travel as fast as he/she possibly can. The final type of biker is the commuter who uses the trail at select times early in the morning and late in the afternoon to travel between work and home. This variety may create not only conflicts but also accicents.

Many other individuals, including hikers, joggers, etc., also use these trails, increasing the potential for conflict. Bike trails in the NCR should generally provide an opportunity to spend time out-doors away from the predominant urban environment. They should also provide enjoyable trips to historic sites or through natural areas. The pleasure of such trips is diminished if there exists a potential for conflict.

2.2 POTENTIAL PROBLEMS

Certain potential problems must be resolved in planning new bikeways and major modifications to existing facilities in order to provide as effective a bikeway system as possible.

2.2.1 CONFLICTING USES

Because the NCR is contained partially with a highly urbanized area, it is subject to some of the problems of urban living including high crime rates. Larceny of bicycles, some assaults, and vandalism of historic structures on Park Service property are common occurrences. In addition, the multiplicity of uses to which the trails are put reduce the likelihood of safety. NCR recognizes that at some point the region's trails may be overloaded. When that occurs a solution must be available.

The first potential problem is the conflicting uses of the bike trails and routes. In some instances, recognition that conflict may exist due to incompatible uses or overcrowding may mean that bicyclists are diverted to other routes which may themselves create conflicts. Yet, if bicyclists are not diverted, conflicts may be seen in an increased number of accidents among bikers and other trail users.

2.2.2
LINKAGES

The second potential problem concerns linkages with other jurisdictions. The NCR is unique in that it is located in an area where many jurisdictions interface. Since there are points of interest beyond as well as within NCR's boundaries, individuals wish to travel from one jurisdiction to another. Where feasible, provisions should be made for linkages both between trails of NCR areas and between NCR trails and those of other jurisdictions. Such linkages have considerable financial and environmental cost implications and must be considered carefully before undertaken.

2.2.3
MONITOR AND UPDATE

Since bikeway planning is in its relative infancy, special attention should be placed on monitoring plans and improvements to determine their utility. Some recommended approaches in monitoring are discussed in greater detail in Chapter 4.

2.2.4
UTILIZE REGIONAL DESIGN PRINCIPLES AND STANDARDS

The major objective of this manual is to detail some of the principles and standards which are relatively unique to bikeway facility planning and design. Chapters 5 and 6 outline basic facility design principles and standards. These chapters form the basis for accomplishing this planning task. It should be noted here that the design principles and standards in this report apply only to <u>designated bikeways</u> and not to other trails which may be used by bicyclists but were not established specifically to accommodate bicycle traffic.

CHAPTER 3 INTERFACE POINTS

Interface points within the National Capital Region can be defined as locations at which a junction occurs with trails of another jurisdictions, or trails of another park area within the NCR. Interface points must be approached systematically for they constitute one of the most pressing problems in biketrail preparation and planning aside from day-to-day maintenance.

Interface points are important because they are related to goals and objectives for accessibility and safety. Interface points, if properly achieved, would provide good accessibility into and out of the National Capital Region and among the various parks within the Region. In addition, improving interface points could improve locations which frequently involve dangerous intersections. Interface points are also important because they provide a focus for the overall planning process.

3.1 POTENTIAL PROBLEMS WITH INTERFACE POINTS

Interface points may create several problems for bicyclists. One is that they can disjoint bicycle trips by providing functional roadblocks to bicyclists. Where, for example, there is no linkage between NCR trails and those of other jurisdictions, accessibility for individuals who might benefit from the use of NCR trails is reduced or eliminated. Unsafe conditions may occur when no plans have been made for linkages. Bicyclists, determined to get to their destination, may venture into risky situations as they cross major highways and dangerous intersections.

3.2 NEED FOR SYSTEMATIC APPROACH

A planning process should be used so that problems at planned or existing interface points can be resolved in a logical and comprehensive manner. The should be dealt with on the basis of their relationship to the bikeway system, rather than solely as an individual site problem. In brief, the steps to be followed are:

1. Inventory existing conditions and analyze existing or potential problems

2. Analyze existing or potential use charcteristics

3. Determine necessity/desirability given stated goals and objectives

4. Develop alternatives

5. Evaluate impact of the alternatives on NCR bikeway system, including characteristics such as safety, congestion, etc.

6. Analyze cost factors (determine cost-effectiveness)

7. Select and detail alternatives

8. Implement

9. Monitor

CHAPTER 4 MONITORING PROCEDURES

The major purpose of monitoring is to provide a continuous overview of bikeway systems. Monitoring ascertains whether or not present design standards are sufficient given present use and needs. Monitoring undertaken on a regular basis can keep small problems from turning into major ones. Monitoring provides an input to decision-making by helping to determine where priorities of the individual areas within the NCR should lie. Finally, and not inconsequentially, monitoring can be used to substantiate requests for the annual maintenance budget or from special expenditures such as new construction or major improvement of a facility. The monitoring system described in the following paragraphs would provide data to the Park Superintendent and also to the Maintenance Director of a park which would be useful in making decisions.

4.1 SUBJECTS FOR MONITORING

4.1.1 GOALS AND OBJECTIVES AND DESIGN STANDARDS

Several subjects are of primary importance for a successful monitoring program. The first of these is the extent to which the trail system meets overall goals, objectives, and design standards. With changing use of a given section of trail, or the entire system, certain design standards may no longer be appropriate. For example, in the early days of bike trail design, trails were often no wider than four feet; but as trail use has increased over the years, trail design standards have proposed wider facilities, so that now trails are sometimes designed at nine or ten feet, or even broader widths. Keeping good records, which over a period of several years detail the level of use, can be helpful in ascertaining whether or not design standards meet current needs.

4.1.2 BIKEWAY ACTIVITIES OF OTHER JURISDICTIONS

A second area to be monitored are the bikeway activities of other jurisdictions and the effects these have on the National Capital Region. The Council of Governments (COG) provides a major source of information on such activities in the Washington, D.C. metropolitan region.

4.1.3 BIKEWAY ACTIVITY IN NATIONAL CAPITAL REGION

Another subject for monitoring is the bikeway activity of each area within the National Capital Region. The primary purpose of such monitoring is to see

whether or not bikeways are internally consistent within the entire region. This is an important factor in insuring safety, comfort, accessibility, and overall well-being of bicyclists. This also provides a good vehicle for Park Superintendents to communicate with each other regarding bikeways. Shared information can be mutually beneficial.

4.1.4
LEVEL OF USE

Level of use should be monitored, and can be determined through observation and casual conversations with trail users. It is important to know the level of use of bicyclists, pedestrians, automobiles, and other types of users. This will indicate shifts in priorities and the relative importance of portions of bike trails to bicyclists. This is also one key factor in helping to determine budgetary requirements. It is also critical to the planning of new trails.

4.1.5
ACCIDENTS RATES

Accident rates are very important in helpling to establish safe design features of bike trails. Consistently high accident rates in a particular section of bike trail may imply unsafe design or a conflict of user. The following accidents should be monitored: bicycle alone, bicycle with bicycle, bicycle with pedestrian, and where applicable, bicycle with auto. While it is understood that many bicycle accidents are not reported to the Park Police, keeping records of those accidents which are reported should provide some indication of trends and should be helpful in planning additional bikeway segments and facilities.

4.1.6
CRIME RATES

Crime rates indicate the necessity for certain kinds of surveillance, and they may also indicate the necessity for modifications in location or design of bikeway facilities. For example, in areas where theft of bicycles is high, it might be better that bike racks with locking devices should be installed. Obviously, crime rates will vary with the location of the park and the nature of the park. Vandalism on a nature trail may be related to throwing trash on the trail or destroying natural plant forms, etc. On more urban trails vandalism of facilities is common and on a bikeway such as the C&O Canal towpath, vandalism may be directed at vacant historic structures along its banks. The other two types of crime which are likely to occur in heavily wooded and urban areas are robbery and assault. If, however, it is determined that there are additional kinds of crime which do occur, these obviously would be included in the monitoring process.

4.1.7
MAINTENANCE PROCEDURES

Maintenance procedures should be monitored for their effectiveness and efficiency and updated as necessary. As the trail system grows and matures in the National Capital Region, maintenance procedures will begin to change and different demands will be made on the maintenance crew. In addition, with different levels of use at different times of the year, it is likely that certain types of maintenance procedures will have to be enacted regularly while others are on a cyclical basis.

4.1.8
MAINTENANCE STANDARDS

Maintenance associated with the gradual "wearing-out" of surfaces and materials is not likely to benefit from frequent monitoring of existing conditions. Moreover, standards for this type of maintenance (i.e., resurfacing of asphalt trails), can be derived from present maintenance practices and experience. However, the demands for maintenance created by vandalism, severe and damaging weather as well as annual tree and shrubbery growth, are appropriately identified through frequent monitoring. This type of monitoring, for maintenance purposes, should be conducted on a regularly scheduled basis.

4.1.9
ANNUAL REVIEW OF FACILITIES

This will be conducted to ascertain whether the design of these facilities is adequate for present levels of use. Annual peak period counts of bicycle, motor vehicle, and pedestrian traffic should be taken at various times of the year to determine whether or not facilities are adequate. A regular review of the riding surface, the design, and trail environs should be conducted by the maintenance crews to make sure that these are up to standard and that the trails and their environs themselves do not constitute danger for other maintenance activities occurring in the park. More frequent monitoring of facilities should occur to identify maintenance needs associated with weather damage and vandalism.

CHAPTER 5 BICYCLE FACILITY DESIGN PRINCIPLES

The primary intent of this chapter is to identify the alternative facilities which might be provided by the National Capital Region and to discuss the traffic engineering principles underlying these alternative responses. Although much of the N.C.R. bikeway system is considered an off-street facility, most of the "interface points" within the N.C.R. defined in Chapter 3 intersect with the existing street network which currently provides for most bicycling activity in the metropolitan area. In addition to being key focal points within the N.C.R., these junctions often conflict with dangerous intersections creating hazardous conditions for bicyclists. Resolution of these areas in support of N.C.R. goals to increase bicycle safety, access, and riding environment requires a thorough understanding of bikeway principles and design standards when applied to both on-street and off-street facilities. The design principles for bicycle facility improvements include:

1. Bicycle facility design objectives
2. Bikeway options
3. Roadway widths required to accommodate bicycle lanes
4. Selected bikeway related traffic engineering considerations
5. Traffic management techniques without capital investment
6. Intersection treatments
7. Bicycle parking facility options

5.1. BICYCLE FACILITY DESIGN OBJECTIVES

For the purposes of this manual, a bicycle facility is defined as "a physical improvement designed to aid in the direct, safe, and secure movement and storage of a bicycle and its rider". The most important reasons for providing special bicycle facilities are to improve safety and security. There are several ways in which special bicycle facilities can achieve these objectives:

1. By directing the bicyclist to a safe location for riding
2. By warning both the bicyclist and the motorist (and/or pedestrian) of the danger in a shared travel environment
3. By providing lateral separation between modes of transportation (bicycle-motor vehicle separation, or bicycle-pedestrian separation)
4. By reducing intersection (or intersection-type) conflicts
5. By increasing predictability in the movements of the motor vehicle (and/or pedestrian) and the bicyclist
6. By increasing the visibility of the bicyclist
7. By reducing the ease with which an unattended bicycle can be stolen or vandalized

It is these principal design objectives which serve as the basis for appraising the specific facility options which are discussed in the succeeding sections of this chapter.

5.2. BIKEWAY OPTIONS

There are many different types of bikeway options that might be considered in planning and engineering a bikeway system. These bikeway options are illustrated in Table 5.1 and are further discussed below in general ascending order of potential protection to the bicyclist. As a ~~matter~~ of NCR policy, ~~[illegible]~~ independent bike paths (See paragraph 5.2.9.) will be designated in NCR unless their use is precluded by existing site conditions or budgetary constraints.

5.2.1. Street or Roadway (Do Nothing)

The ordinary city street or rural road is the most common existing facility aiding the movement of bicyclists, and these facilities will continue to be the most important links in the foreseeable future. Perhaps as much as 70 percent of the total urban street system mileage may be relatively safe for bicycling without any significant improvement. Thus, a very important option in bikeway system planning is to "do nothing" on appropriate streets.

5.2.2. Surface Improvements to Street or Roadway

The bicyclist is much more sensitive than the motorist to the quality of the street surface. Therefore, the removal of irregularities, depressions, and bumps can be important in improving bicycling conditions and in encouraging the use of particular streets. Since bicyclists tend to ride near the edge of streets, maintenance of gutter and pavement edge is particularly important.

One problem evident in many communities is sewer grates which have openings parallel to the street. These grates are not only an inconvenience but also a hazard, since the openings are large enough to permit bicycle tire penetration and cause an accident. The most common remedy is to purchase sewer grates with slits which are diagonally or perpendicularly oriented or are designed in a honeycomb fashion. Other solutions include welding special bars on existing sewer grates. Where unsatisfactory grates cannot be removed, special striping or painting of the pavement to warn the bicyclist should be considered (see Chapter 6 for a more complete discussion).

5.2.3. Bike Route

The "bike route" option is merely a road signed for bicycling but with bicyclists sharing the road surface with motor vehicles (see Table 5.1). The signing of a bicycle route would satisfy two of the most elemental bikeway objectives: (a) directing the bicyclist to use relatively safe streets, and (b) warning both the bicyclist and the motorist of potential danger. There is some question, however, as to whether bike route signing has much utility even though its cost is usually low and bike routes are easy to implement. While a bike route might very well direct some bicyclists to safe streets having some degree of continuity, experience in many communities has shown that bicyclists go where they please, and signing or special facili-

ties in many cases do not materially affect this situation. Furthermore, while signing can be construed as a warning, there is the concern that mere signing may create a false sense of security on the part of the bicyclist.

5.2.4.
Widened Street

Perhaps a more significant improvement than a bike route would be street widening that results in lane widths greater than those required for motor vehicle traffic. Many bicyclists claim that they really do not need much in the way of special signing or pavement markings, provided they can have a "refuge" or lateral separation from the motor vehicle. Many city streets which are wider than necessary to provide two lanes of moving traffic, but are not quite wide enough to provide four lanes of traffic, are typical examples of a situation where the bicyclist feels a sense of safe lateral separation (see Chapter 6 for appropriate widths).

5.2.5.
Unprotected Bike Lane

The unprotected bike lane formalizes the widened street by striping the pavement to symbolically separate the bicycle from motor vehicles. This has the assumed advantage of making the movements of the bicyclist and the motorist more predictable. A major disadvantage of such a design treatment is the difficulty in justifying the removal of a parking and/or a moving traffic lane to make room for such a facility. Another problem is that motor vehicles often infringe upon these unprotected lanes, especially at intersections, where it is instinctive standard practice to use the right curb lane for making a turn.

5.2.6.
Protected Bike Lane

Further formalizing the lateral separation between the bicyclist and the motor vehicle, the protected bicycle lane accomplishes this objective by means of an actual physical barrier as opposed to a painted stripe (see Table 5.1). This has the effect of virtually eliminating the danger of "rear end" or "side swipe" collisions with motor vehicles except at intersections. It could have the further advantage of minimizing or totally eliminating intersection-type collisions along the bike lane by eliminating driveway entrances and other similar access points. This *advantage* is also the principal disadvantage of such a facility, for unless driveways can be eliminated, the effective application of such a barrier system is limited.

5.2.7.
Bike Path (Within Street Right-of-Way)

The bike path within a street right-of-way not only has the advantage of providing some form of a physical barrier between the bicyclist and the motorist, but in addition further separates the bicyclist from the motor vehicle, thus permitting a better riding environment through reduction of noise and fumes (see Table 5.1). While such a facility has a decided advantage in the lateral separation of bicycles and motor vehicles, this type of treatment typically presents problems at street intersections. Turning motorists may not see the bicyclist prior to arriving at an intersection, or the bicyclist

TABLE 5.1
BIKEWAY OPTIONS

Option	Other Frequently Used Terms	Description of Improvement	Degree of Separation from Motor Vehicles
Do Nothing 	--	Street with no special improvement, but good surface and increased maintenance	None
Lane Widening 	--	Curb lane widened, street surface improved, increased maintenance, pave shoulder	De facto operational separation
Bike Route 	Class III	Road signed for bicycling but with motorists and bicyclists sharing road surface	None
Bike Lane (unprotected) 	Class II	A striped lane for exclusive or semi-exclusive bicycle use	Symbolic separation

TABLE 5.1 (continued)
BIKEWAY OPTIONS

Option	Other Frequently Used Terms	Description of Improvement	Degree of Separation from Motor Vehicles
Bike Lane (protected) 	Class II	A lane for exclusive or semi-exclusive bicycle use separated by physical barrier	Structural separation
Sidewalk path 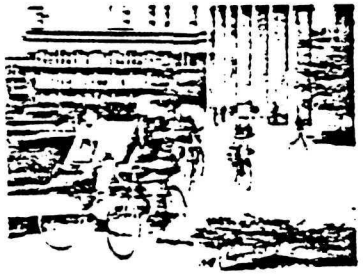	--	Sidewalk designated for bicycle use	Structural separation from motor vehicles but shared surface with pedestrians; limited environmental separation
Bike Path (within street right-of-way) 	Class I	Bike path set off-street with intervening land area	Structural separation; limited environmental separation
Bike Path (independent) 	Class I	Path designated for exclusive or semi-exclusive bicycle use completely separated from street right-of-way	No relationship to motor vehicle environment

may be coming from an unpredictable direction or angle (since such facilities would allow two-way travel), thus increasing the potential accident danger at these locations. Such facilities can be costly unless provided at the time of original street construction.

5.2.8.
Sidewalk Bikeway

A solution similar to a bike path within a street right-of-way is the designation of selected sidewalks as bikeways (see Table 5.1). This might be done either by sharing the entire sidewalk with pedestrians or by designating a selected portion of the sidewalk for bicycles only. This latter solution is typically unfeasible, as bicyclists and pedestrians will stray without some sort of physical restraint. The obvious disadvantage of this treatment is that it requires the shared use of the movement surface by bicyclists and pedestrians, thus creating a hazard for both. Such a solution has the same intersection disadvantages as does the bike path within a street right-of-way. However, where pedestrian volumes are low, the sidewalk designation within street rights-of-way does serve a purpose. This type of solution might be particularly useful for younger children who are too young to ride in traffic and could be instructed to dismount the bicycle when crossing the street. However, this type of solution will not be attractive to most bicyclists due to the slower riding speeds that would be necessary on a sidewalk as opposed to riding in the street.

5.2.9.
Independent Bike Path

The preferred bikeway solution is the independent bike path completely divorced from both motor vehicle traffic and significant pedestrian traffic (see Table 5.1). Such a facility can be designed almost entirely to the bicyclist's needs. However, a disadvantage of the independent bike path is that it must often intersect with streets in mid-block locations. Typically, the motorist may not expect a bikeway crossing in these locations, and a total grade separation may be a costly solution. Since the independent bike path is not within a transportation right-of-way, there may be additional problems involved in right-of-way acquisition.

5.3.
ROADWAY WIDTHS REQUIRED TO ACCOMMODATE BICYCLE LANES

A major deterrent to providing bicycle lanes on streets is the additional street widths they require. As shown in Figure 5.1 a one-way bike lane should be at least five feet wide (See Section 6.2) Since bicycle lanes should be one-way in on-street situations (See Section 5.4.1), a total of ten to twelve additional feet might be required on a given street if excess street width is available. In many developed areas, the only practical solution in providing special bike lanes might be the removal of automobile parking lanes.

5.4.
SELECTED BIKEWAY RELATED TRAFFIC ENGINEERING CONSIDERATIONS

Beyond considering the basic advantages and disadvantages of the various bikeway options, there are numerous traffic engineering principles and techniques which should be considered in bikeway design and operation. Some of the more important

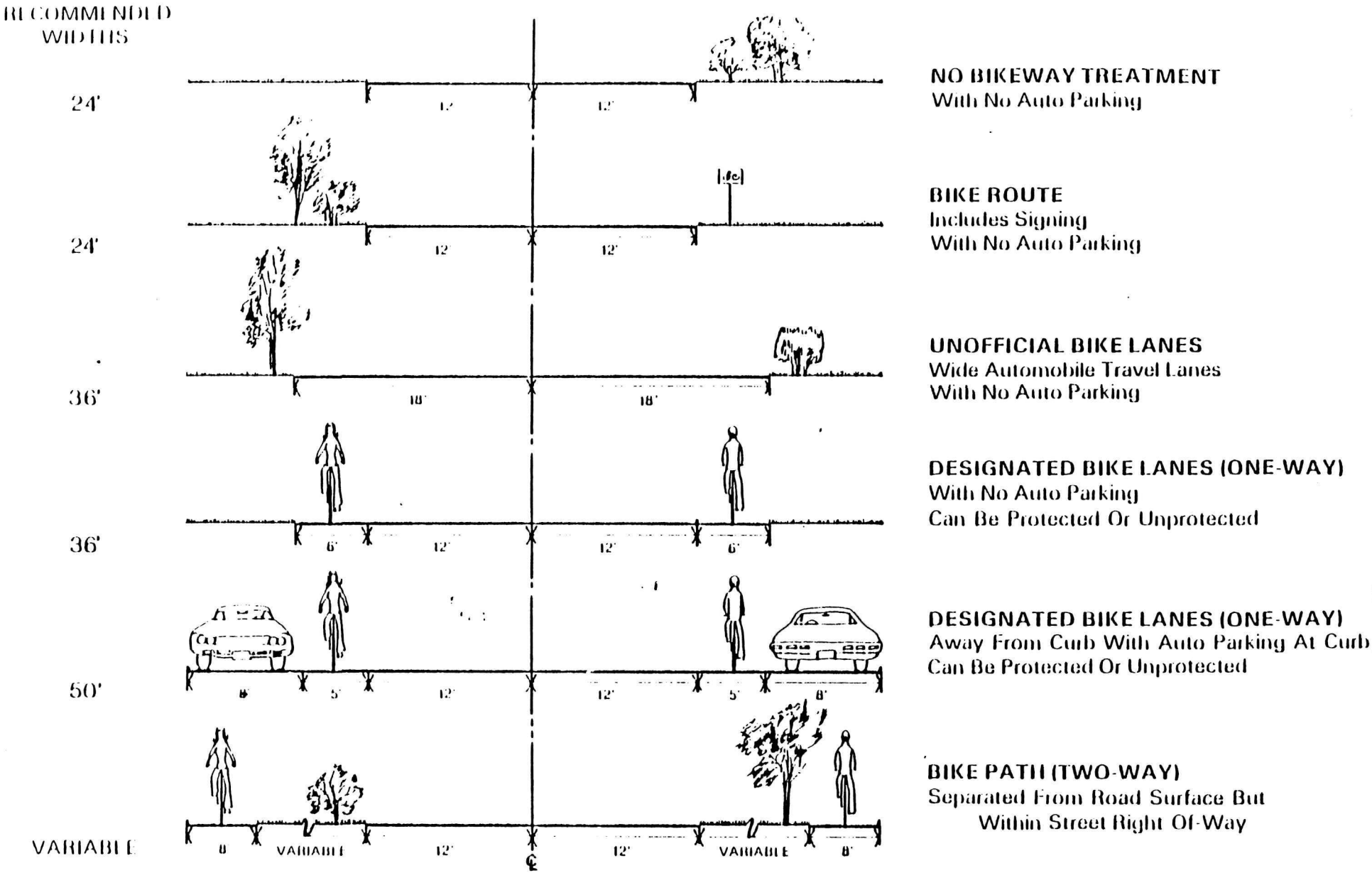

FIGURE 5.1
Minimum Roadway Surface Widths For Various Bikeway Options

of these are presented in this section. Due to the considerable importance of intersection design, many traffic engineering principles associated with this aspect of bicycle facility design are discussed separately in Section 5.6.

Among the most basic overall traffic engineering principles that should be considered in the design of bicycle facilities are the following:

1. Existing traffic engineering conventions should be followed where possible.
2. All design should encourage or increase the predictability of the bicyclist in motor vehicle traffic.
3. The design should be one which is easily visible to motorists, bicyclists, and pedestrians.
4. The design of the bikeway network should be one which does not follow gimmicky or torturous routing.

5.4.1.
One-Way Versus Two-Way Bikeway Operations

There are two basic guidelines which should be seriously considered in preparing bikeway designs for two-way bicycle operation:

1. Two-way bikeways on a *street surface* should be avoided.
2. Two-way bikeways should be discouraged if these facilities cross streets at or near intersections.

The reasons for these conclusions are shown in Figure 5.2. As seen in "A", special bike paths within a street right-of-way, but segregated from the motor vehicle travel surface, present a problem at intersections. The greatest problem is that of an unexpected direction of approach into the intersection by the bicyclist and the resulting increased chance for colliding with a motor vehicle. In addition, by requiring motor vehicles to stop a greater distance from the intersection, the sight distances of motorists are hindered.

A two-way bike lane on a street presents at least three major problems (see "B" in Figure 5.2). First, a two-way facility requires the bicyclist to travel in a direction opposite the adjacent motor vehicle travel lane. This is visually disconcerting to the motorist and could cause accidents simply because it does not follow the recognized traffic convention. Second, and most important, two-way bikeway operation requires unconventional turns at intersections. The motorist does not expect the bicyclist to be turning in the direction indicated. A third concern with two-way bikeways in on-street locations is a transition problem (see "C" in Figure 5.2). Since the bicyclist has to be going the "wrong way" in one lane of a two-way on-street bikeway, he must weave across traffic to bike in the proper lane when the special bike lane begins or terminates.

5.4.2.
Bikeways on One-Way Street Pairs

Most bike lane improvements should be one-way facilities located on each side of the street, thus permitting two-way bike traffic on that street. In some locations, limiting bicycle use to a single one-way lane on a given

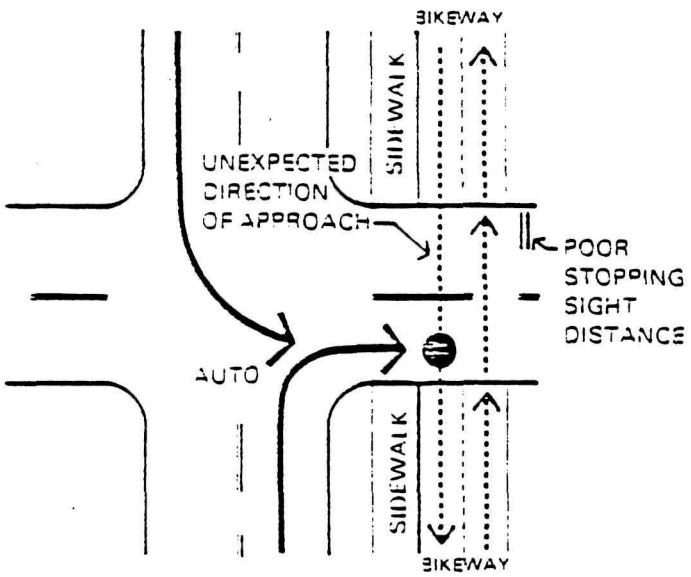

A. TWO-WAY OFF-STREET BIKEWAY

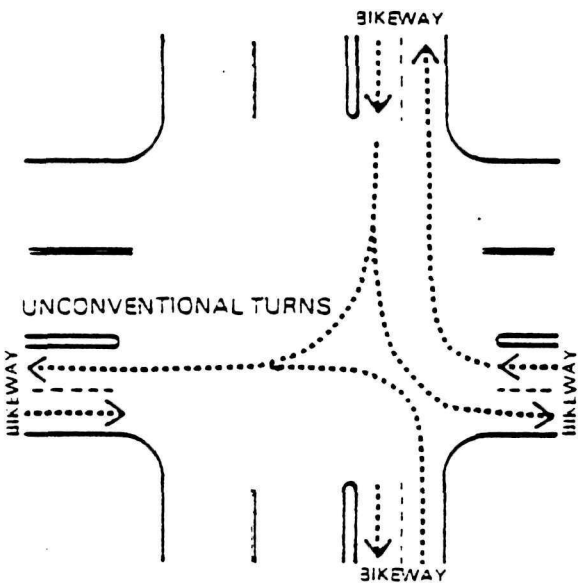

B. TWO-WAY ON-STREET BIKEWAY

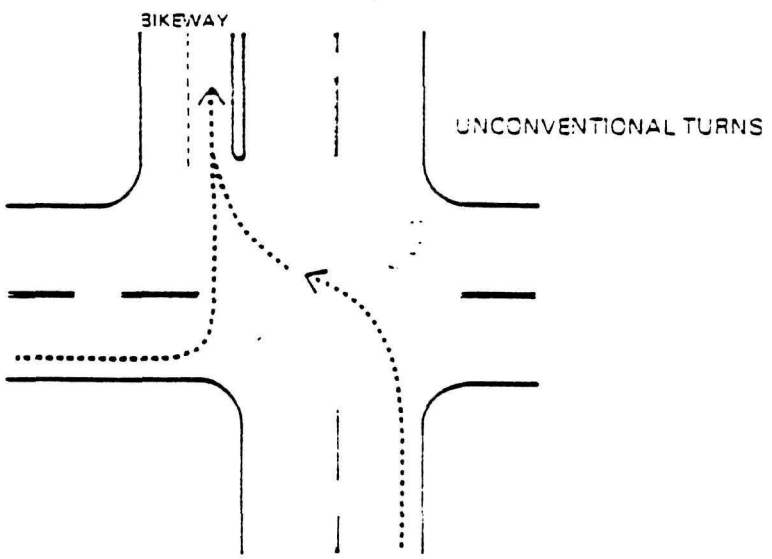

C TRANSITION AT THE BEGINNING
OR END OF A TWO-WAY
ON-STREET BIKEWAY

FIGURE 5.2
Problems Associated with Two-Way Bikeway Operations

street might be appropriate; for example, one-way bicycle lanes could be located on a pair of one-way streets. The advantage of this application is that one-way street treatment could resolve the problem of removing a motor vehicle parking or traffic lane for bicycle lanes. The major disadvantage of such a treatment is that bicyclists may not tolerate being diverted even one block and might be tempted to use the lanes as two-way facilities.

5.4.3.
Transition Sections

Transition sections are a particularly important engineering and design problem because a bikeway change or termination may significantly change the relationship between bicycle and motor vehicle. There are several different ways of treating transition sections where bikeways intersect with or end at streets. Some of the more typical applications are described below and illustrated in Figure 5.3.

Termination of Bike Lane. Appropriate striping and signing should accompany this termination if a protected bike lane ends on a street at a location other than at an intersection (see "A" in Figure 5.3).

One-Way Bike Path Transition into One-Way Bike Lane. In this case, the bike path to bike lane transition can be accomplished at a sharp incidence angle, since no merging with motor vehicle traffic is anticipated (see "B" in Figure 5.3).

Bike Path Transition to Vehicle Traffic Lanes. A relatively sharp angle of approach would be helpful to give the bicyclist a view of oncoming traffic, and then a gradual transition section should be provided to allow a smooth merge into the motor vehicle traffic stream (see "C" in Figure 5.3).

Transition Between Two-Way Bike Path and One-Way Bike Lanes. A sharp angle of approach is also helpful in this transition, since it permits the bicyclist to see oncoming traffic and avoid potential conflicts (see "D" in Figure 5.3).

Crossing of Two-Way Bike Path in Mid-Block Location. This should be accomplished at right angles to encourage the best possible view of traffic conditions prior to crossing (see "E" in Figure 5.3).

5.4.4.
Preferential Bicycling Streets

In certain circumstances, it may be appropriate to provide two-way bikeways in conjunction with downgrading streets as motor vehicle carriers (see Figure 5.4). This design principle should be pursued with the realization that bicycling is safest where motor vehicle traffic is at a minimum. It is obviously not possible to eliminate all motor vehicles from most streets; however, traffic can be reduced by eliminating all vehicles that do not have to be on that particular street, or even in that particular block, except for the purpose of going to or from the frontage properties. This reduction could be achieved by channelizing intersections to force vehicles to turn off the street while bicycles are permitted to continue through.

A. TRANSITION OF PROTECTED BIKE LANE TO UNPROTECTED BIKE LANE

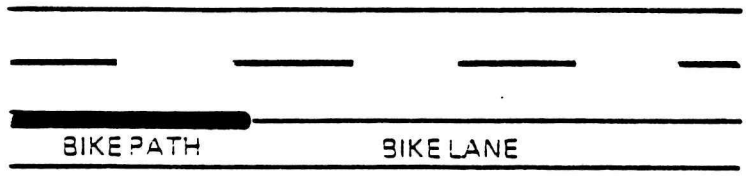

B. TRANSITION OF ONE-WAY BIKE PATH TO ONE-WAY BIKE LANE

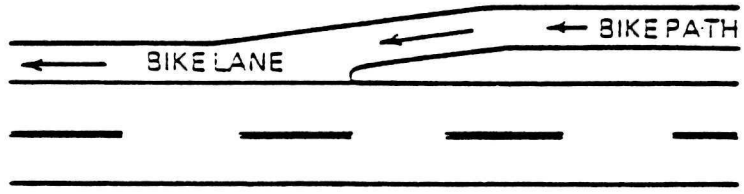

C. TERMINATION OF BIKE PATH AT STREET

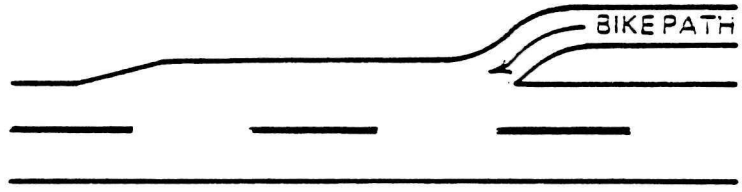

D. TRANSITION BETWEEN TWO-WAY BIKE PATH AND TWO-WAY BIKE LANE

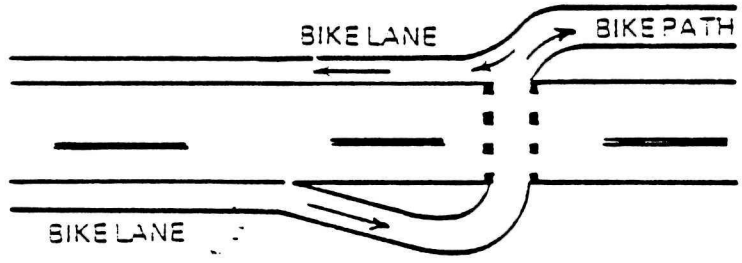

E. STREET CROSSING TECHNIQUE FOR BIKE PATH

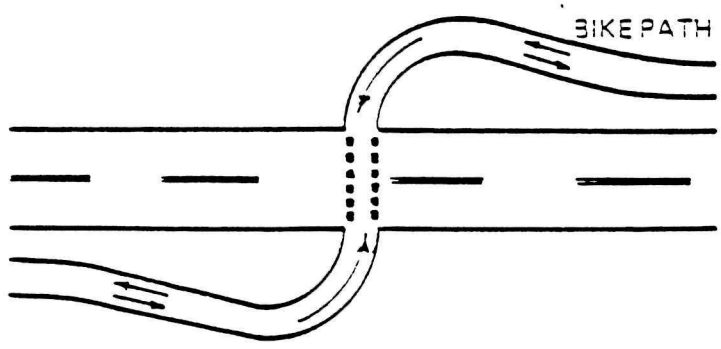

FIGURE 5.3
Bikeway Transitions with Streets

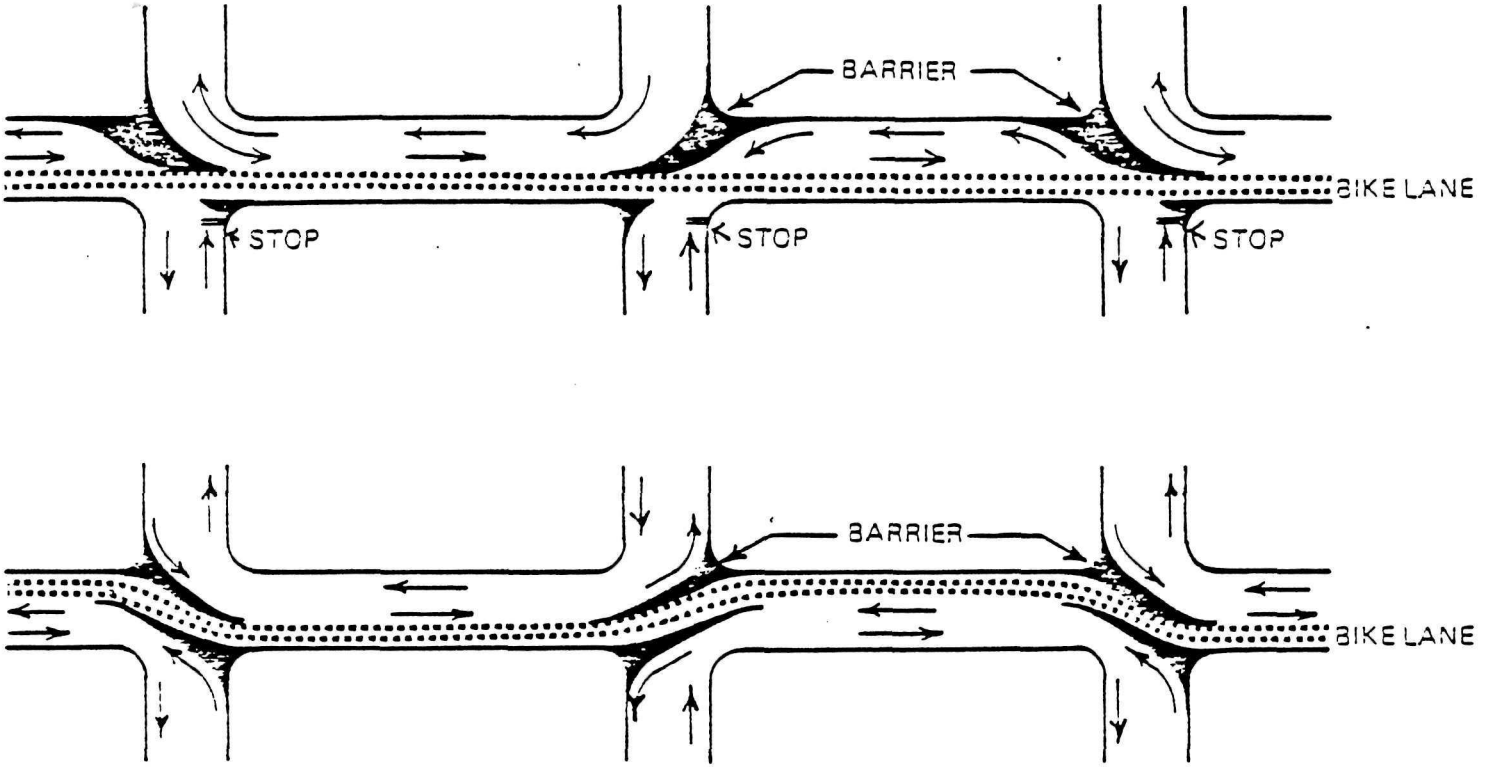

FIGURE 5.4
Alternative Preferential Treatments for Bicycles

In order to prevent serious conflicts at intersections, it may be necessary to modify the existing circulation system which would require some sacrifice of convenience by motorists. Alternative recommendations include:

1. Motor vehicles required to stop before crossing a bikeway
2. Specially designed signs to call motorists' attention to a two-way bikeway
3. Turning restrictions for motor vehicles
4. Occasional special signal controlled areas

5.5.
TRAFFIC MANAGEMENT TECHNIQUES WITHOUT CAPITAL INVESTMENT

Beyond the provision of physical facilities to assist the bicyclist, there are many traffic management techniques which could be utilized to assist the bicyclist on selected streets without significant capital investments. These techniques might be used either in conjunction with or completely separate from the provision of special bikeways.

5.5.1.
Speed and Volume Control

Since a principal danger to the bicyclist is the speed differential between the bicyclist and motor vehicle traffic, it is conceivable that in some areas motor vehicle traffic could be slowed by special traffic devices such as signs, signals, and bumps. These devices may also be used to divert motor

vehicle traffic to other streets. Such solutions are most appropriate where: (a) street widths are too narrow to permit the development of a special bike lane, or (b) motor vehicle traffic need not move rapidly. However, speed and volume control are difficult to enforce.

5.5.2.
Parking Prohibition

Prohibition of automobile parking from one or both sides of a street creates greater lateral separation between the bicyclist and passing motor vehicle traffic. The removal of parked cars also removes the danger of cars crossing the bike lane and the danger of car doors opening in the path of the bicyclist. The removal of parking should not be thought of as an easy way of creating a bike lane unless alternative automobile parking is available. ~~Where the parking demand is high, the bike lane will be provided at the inconvenience of motorists and may bring adverse public reaction.~~

5.5.3.
One-Way Street Designation

By designating streets in a one-way configuration (typically a pair of streets), a lane might be freed for use as a special bicycle lane. The use of one-way street pairs can also improve motor vehicle traffic movement because: (a) traffic conflicts are reduced, (b) greater vehicular capacity is created, (c) signalization can be better coordinated, and (d) turning movements are not inhibited. In general, the safety of both bicyclists and motorists can often be improved with the use of one-way streets.

5.5.4.
Preferential Signing

In those cases where heavy flows of bicycle traffic can be identified, stop sign designations might be altered to give preferential signing to the street with heaviest bicycle use. However, this must be done carefully, since such preferential signing for bicyclists might also induce heavier motor vehicle traffic on the same street.

5.5.5.
Temporary Street Closings

Many cities have experimented with closing selected streets on weekends for the exclusive use of bicyclists. This concept might realistically be utilized during evening hours or off-peak hours through special signing, with street traffic limited to local use only.

5.6
INTERSECTION TREATMENTS

Available accident statistics indicate that the greatest hazard to bicycling occurs at intersections. Even in those studies that indicate that the majority of acci-

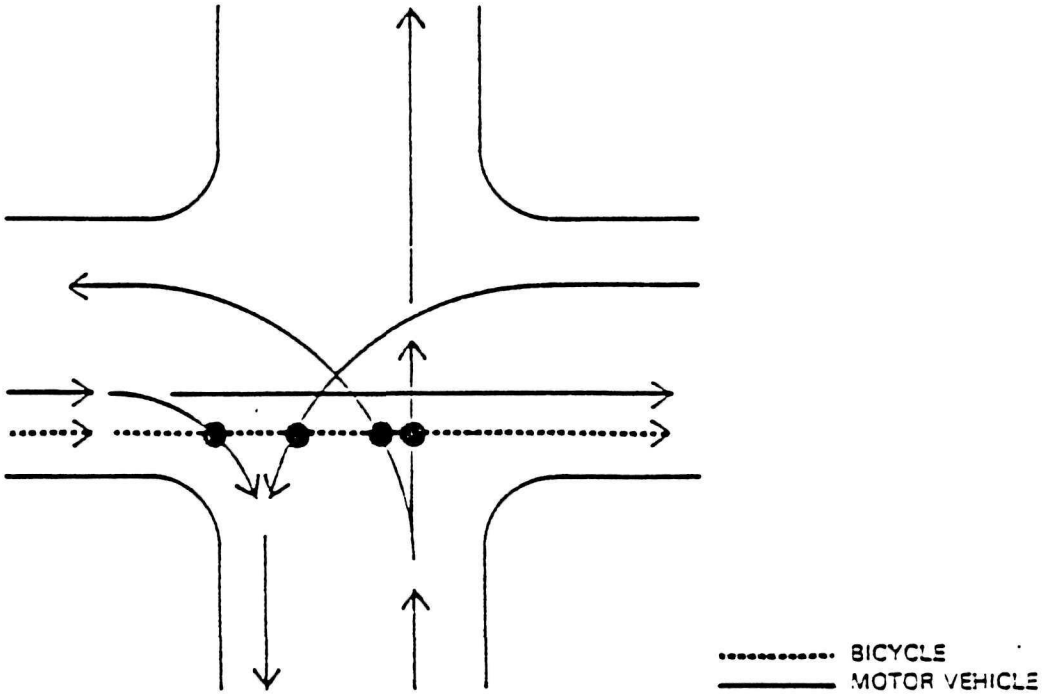

FIGURE 5.5
Conflicts Between Motor Vehicles and Straight-Through Bicycle Movement at a Controlled Intersection

dents occur in mid-block locations. further analysis reveals that many of these accidents are intersectional in nature, involving conflicts between bicyclists and motor vehicles entering or exiting from driveways.

Motor Vehicle Turn. In the motor vehicle turning movement, the bicyclist merges with traffic to the inside lane and completes the turn as a motorist would (see "A: in Figures 5.6 and 5.7). This turn may be less dangerous than other maneuvers, provided the bicyclist is experienced and cautious, because it is a predictable left-turning maneuver from the motorist's point of view. Furthermore, there are design solutions which could make this turning movement safer (see following Section 5.6.2).

Two-Phased On-Street Turn. The two-phased on-street turn (see "B" in Figures 5.6 and 5.7) is the type of turn which is most often advocated as the safest for bicyclists. The major deficiency of this type of turn, however, is that it requires the bicyclist to wait through two signal phases at a signalized intersection. There is also the problem of a safe place for queuing the bicycle between signal phases. The typical resting point for a bicycle would be in the right-turning lane of the intersecting street.

Two-Phased Pedestrian Turn. The option of negotiating a pedestrian type turn has the advantage of partially taking the bicycle off the street at intersections (see "C" in Figures 5.6 and 5.7). If curb ramps were provided, and vehicular turning movements and pedestrian traffic were not heavy, the bicyclist would not have to dismount before crossing the street. However, this procedure does involve out-of-the-way movements for the bicyclist, and, as a result, there is some question whether more experienced bicyclists would use this turning maneuver.

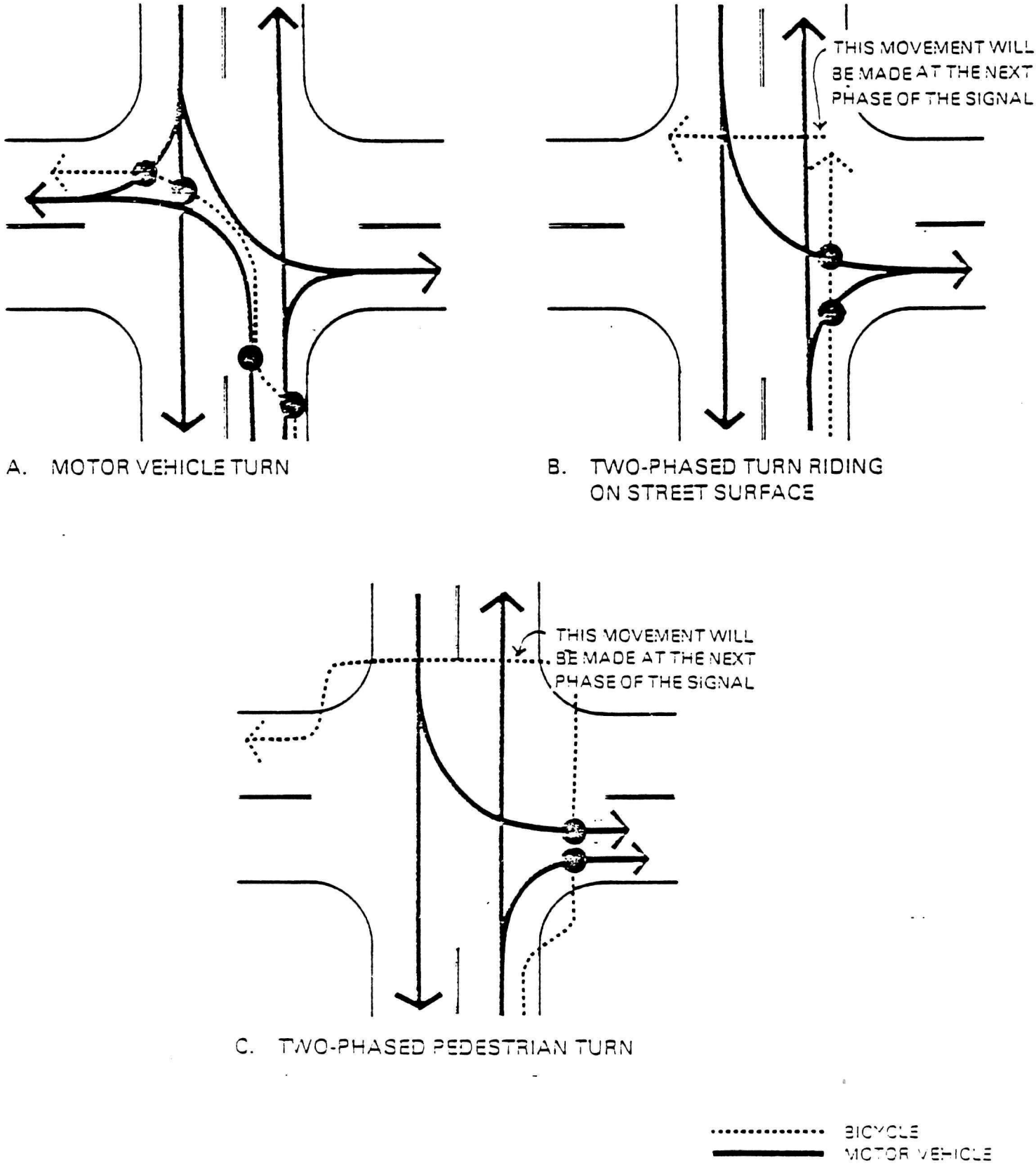

FIGURE 5.6
Conflicts Between Motor Vehicles and Left-Turning Bicycles at a Controlled Intersection

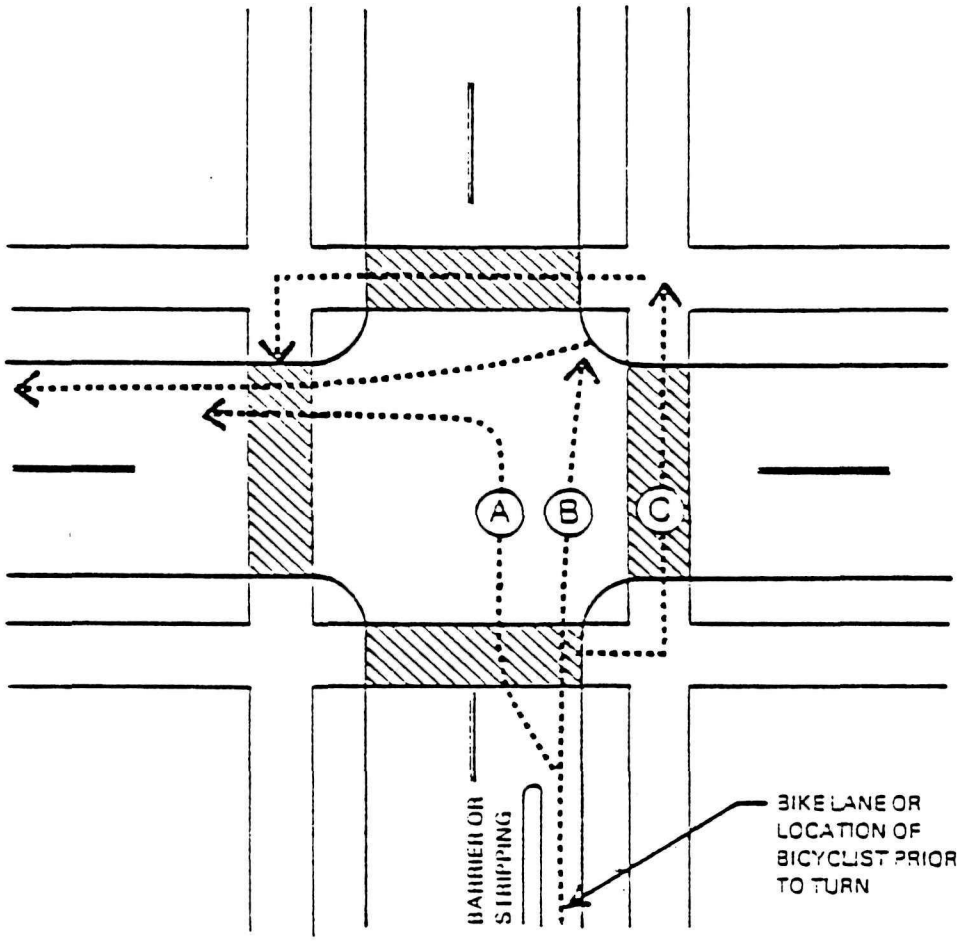

TURNING METHOD	FACILITIES THAT COULD ACCOMMODATE TURN
A MOTOR VEHICLE TURN	WARNING SIGNS SPECIAL SIGNAL PHASING
B TWO PHASED TURN RIDING ON STREET SURFACE	QUEUEING AREAS AT RIGHT CURB
C TWO PHASED PEDESTRIAN TURN WALKING BICYCLE WITHIN CROSSWALKS	CURB CUTS FOR TRANSITION FROM STREET CURB CUTS AT CROSSWALKS

FIGURE 5.7
Alternative Methods of Left Turn Negotiation

5.6.1.
Intersection Negotiation Techniques

There are two principal intersection movements which are most dangerous to the bicyclist. The first is the conflict between the bicyclist going "straight through" an intersection and conflicting with right-turning motorists (see Figure 5.5). The second major problem is the left-turning bicyclist (see Figure 5.6). Basically, the bicyclist has three potential options in making the left turn, given various roadway and bikeway configurations:

1. A motor vehicle turn
2. A two-phased on-street turn
3. A two-phased pedestrian turn

5.6.2.
Intersection Design

The safety of the bicyclist is determined to some extent by his riding ability, and in most busy intersections the bicyclist is vulnerable to conflict with motor vehicles. Special intersection design may reduce bicycle/motor vehicle accidents, although there presently is not enough data to prove this theory. The most promising intersection design treatments are discussed below and illustrated in Figure 5.8.

Protected Bike Lane Crossing. In this design (Ref. 3), a protected bike lane is extended into the intersection area so that right-turning vehicles cannot merge into the bicycle lane, thus protecting the bicyclist (see "A" in Figure 5.8). This solution does have a disadvantage in that the angle of incidence between the bicyclist and the motor vehicle is relatively sharp. This type of design treatment also requires a two-phased left turn which many bicyclists dislike.

Off-Set Bike Path Crossing. In this German design (Ref. 3) for intersection channelization, one-way bike paths are separated from the street pavement (see "B" in Figure 5.8). Under this concept there is a bikeway loop around the intersection. The offset design improves the angle of incidence between the bicyclist and right-turning motorists so that each will appear in the other's forward field of vision. Bicycle queuing areas are off the street surface, eliminating conflict with motor vehicles negotiating right turns. The principal deficiency of this design, however, is that left-turning bicycles must still wait through two signal phases. Furthermore, straight-through bicyclists are taken out-of-direction, and there is a question as to whether this type of facility could be used without some form of enforcement. In addition, the room for such a treatment would only be available in special cases.

Modified Off-Set Bike Lane Crossing. A variation of the above design (Ref. 19) routes the bicyclist off the street into a specially designed protected area at intersections (see "C" in Figure 5.8). This has the advantage of allowing bicyclists the use of the streets while permitting relatively good channelization at intersections. The angle of incidence between bicycles and right-turning vehicles is good. The problem of a two-phased left turn remains, as does the additional problem of bicyclists merging with pedestrians.

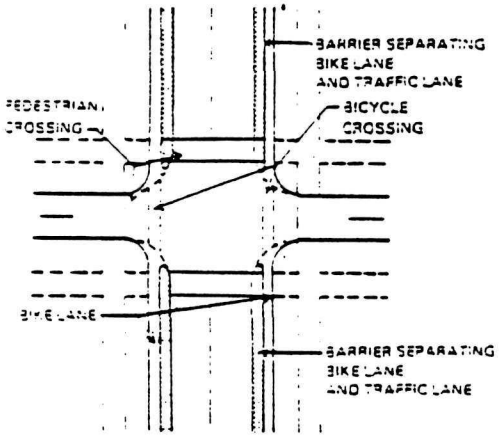

A. PROTECTED BIKE LANE EXTENDED INTO INTERSECTION

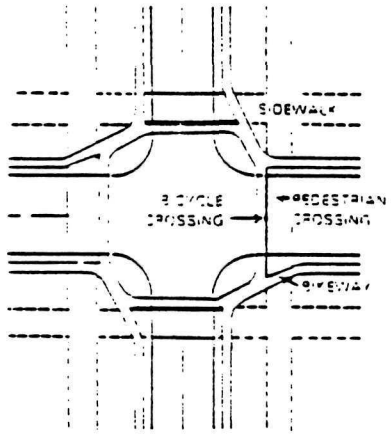

B. OFF-SET BIKE PATH CROSSING

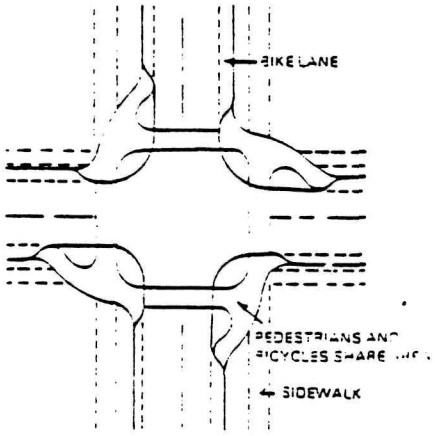

C. MODIFIED OFF-SET BIKE LANE CROSSING

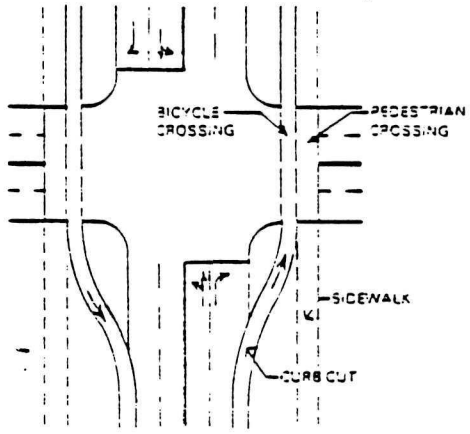

D. BICYCLE LANES OFFSET TO CROSS INTERSECTION

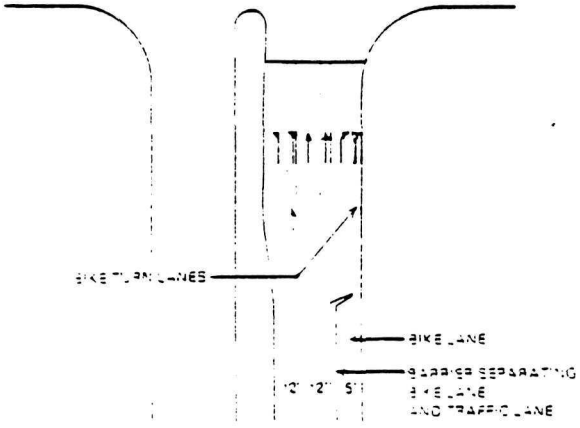

E. SPECIAL BICYCLE TURNING LANE

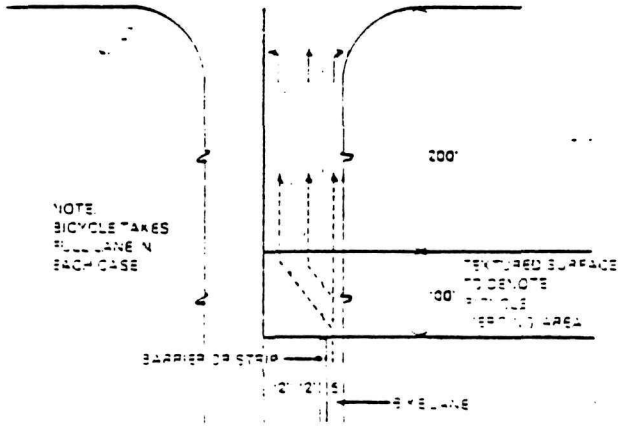

F. FULL MERGE TURNING TECHNIQUE

FIGURE 5.8
Intersection Design Treatments

Off-Set Bike Lane Crossing. This design (Ref. 5), illustrated in "D" of Figure 5.8, has similar advantages to the above described off-set bike lane crossing. It has additional advantages, however, in that it: (a) permits good intersection channelization without decreasing the size of the actual intersection, and (b) does not share space with pedestrians. The angle of incidence is good and queuing can occur off-street. However, a two-phased turn is still required by this design.

Bicycle Turning Lanes. This design treatment (Ref. 19) would formalize the concept of bicyclists operating basically as motorists (see "E" in Figure 5.8). This treatment provides solutions for merging movements as well as intersection conflicts by directing merge movements prior to the intersection. Right-turning bicyclists would remain at the right side of the pavement. Straight-through bicyclists would merge across the right lane into a specially designated area; left-turning bicyclists would merge further across into a left-turning designated area. In this manner, there would be limited weaving conflict between bicyclists and motor vehicles going the same direction. This type of lane designation might be even more effective with special signalization.

Full Merge Turning Technique. This technique is a variation of the bicycle turning lane design and encourages the left-turning bicyclist to merge fully with motor vehicle traffic without providing a special narrow turning lane (see "F" in Figure 5.8). Very good signing procedures should be utilized with bike merging signs placed near motor vehicle traffic lanes and additional signs placed along the sides of the street. Furthermore, a textured surface (see Chapter 6) might be provided in the primary merge area so that motorists and bicyclists alike would be warned of the merging danger.

5.6.3.
Signalization Techniques

There may be many instances in local communities where right-of-way or funding is not available for redesigning intersections to provide for safer bicycling. Yet, communities may wish to improve bicycle operating conditions at dangerous intersections. There are several signalization techniques that might be deployed either in combination with, or completely independent of, special physical on-street improvements. These techniques can usually be implemented in less time and with less capital investment than the special intersection design treatments discussed earlier.

Clearing the Intersection. Since bicyclists have lower operating speeds and acceleration potentials, there is often a problem in clearing the bicyclist from the intersection at the end of a signal phase. This might be remedied by introducing an all red clearance phase to aid bicyclists.

Early Bicycle Stop to Permit Vehicular Right Turn. In conjunction with a special bicycle signal indication, bicycles could be required to stop before motor vehicles to permit motor vehicles to turn right without hindrance by straight-through bicycling activity.

Lead or Lag "Green" for Bicyclists. Preferential treatment might be given for any combination of lead or lag bicycle movements through the provision of exclusive signal phases and signal indications. This type of treatment

must be considered in the context of the vehicular capacity of the intersection with these special movements.

Demand Actuation of Signal. Where a bikeway is on a low volume street and crosses a semi-actuated controlled intersection, pedestrian signal actuators might be deployed for the bicyclist. ~~Sensitive magnetic detectors which could be placed in the street pavement and special induction loop patterns may also be designed in the near future.~~

5.6.4.
Grade Separated Crossings

The only intersection treatment which completely eliminates motor vehicle/bicycle conflict is the grade separated crossing. These crossings, which may be designed as roadway underpasses or overpasses, are very expensive and usually require additional right-of-way. Therefore, utilization of this solution will necessarily be very selective. Grade separations are discussed in more detail in Chapter 6.

5.7.
BICYCLE PARKING FACILITY OPTIONS

One of the major problems associated with bicycle use today is the constant threat of theft. To counteract this threat, a wide variety of locking mechanisms or parking facilities have been designed that can be used to secure the bicycle. These facilities generally fall into one of the following categories:

1. Personal chain, cable and lock
2. Bicycle rack
3. Bicycle rack with chain or cable
4. Bicycle rack with frame or wheel clamp
5. Bicycle rack with frame or wheel clamp and lock
6. Bicycle locker
7. Bicycle enclosure
8. Supervised or attended parking facilities

The degree of security provided by a parking facility will depend upon: (a) the structural design of the facility, and (b) the location of the facility. The various facility options and their relative degrees of security are illustrated in Table 5.3. ~~and described briefly below. Costs for these facilities are itemized in Chapter 6.~~

~~5.7.1.~~
~~Personal Chain or Cable with Lock~~

~~At the present time, most bicyclists must carry their own locking devices if they wish to park and secure their bicycles. While there is a nuisance factor to consider, this alternative does provide the bicyclist with flexibility since, if racks or other parking facilities are not provided, the bicycle can be locked to such available fixed objects as a tree, fence, or lamp post.~~

TABLE 5.3
BICYCLE PARKING FACILITY OPTIONS

Parking Facility Option	Degree of Security (deterrence of theft of part or all of bicycle)	Convenience of Bicyclist	Potential to Charge User Fee
Personal Chain or Cable with Lock 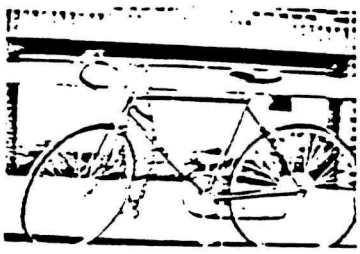	Low	Requires carrying chain or cable plus lock	No
Bicycle Rack 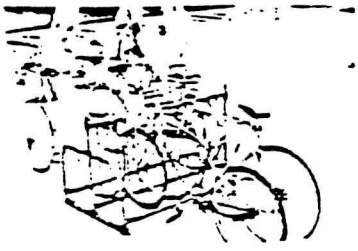	Low	Requires carrying chain or cable plus lock	No
Bicycle Rack with Chain or Cable Provided 	Low-moderate	Requires carrying lock	No
Bicycle Rack with Frame or Wheel Clamp Provided 	Moderate	Requires carrying lock	Yes

TABLE 5.3 (continued)
BICYCLE PARKING FACILITY OPTIONS

Parking Facility Option	Degree of Security (deterrence of theft of part or all of bicycle)	Convenience of Bicyclist	Potential to Charge User Fee
Bicycle Rack with Frame or Wheel Clamp and Lock Provided 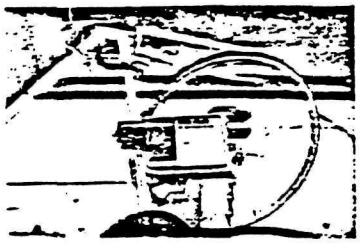	Moderate	Requires key or exact change to use lock	Yes
Bicycle Locker(1) 	High	Requires key or exact change to use lock	Yes
Bicycle Enclosure 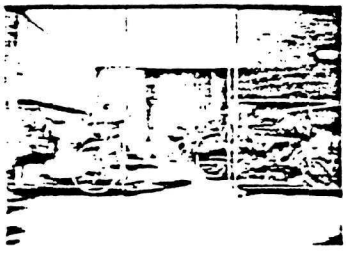	Low-high	Requires key to enclose	Yes
Attendant Storage 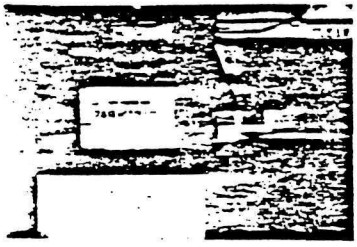 delete	High	--	Yes

(1) Photograph courtesy of Capital Publications, Inc. (Bicycling!)

CHAPTER 6 BICYCLE FACILITY DESIGN STANDARDS

This chapter presents detailed engineering design standards for the construction of specific bicycle related facilities. At the end of this chapter, a special section addresses the estimated costs associated with these standards. Subject areas which will be covered in this chapter include:

1. Bicycle dimensions and operating characteristics
2. Bikeway geometrics
3. Bikeway materials and construction standards
4. Bikeway delineation standards
5. Grade separations
6. Ancillary facilities

Bikeway Planning Criteria and Guidelines (Ref. 3), developed by the Institute of Transportation and Traffic Engineering at UCLA in 1972, the American Association of State Highway and Transportation Officials' (AASHTO) summary report on bikeways and several other reports were used to provide a comprehensive set of bicycle facility design standards. Throughout this chapter, two sets of dimensions will often be given: absolute minimum and recommended standard. Absolute minimum dimensions should only be used in those situations where existing conditions dictate constrained design.

6.1
BICYCLE DIMENSIONS AND OPERATING CHARACTERISTICS

The space requirements for safe and comfortable bicycle operation are dictated by the following three factors:

1. Dimensions of the bicycle and rider
2. Operating characteristics
3. Bicycle clearances

6.1.1
Dimensions of the Bicycle and Rider

Though bicycle dimensions may vary slightly with model and size, the standard dimensions of the average adult rider and his bicycle are shown in Table 6.1 and Figure 6.1.

TABLE 6.1
Typical Bicycle and Rider Dimensions

Characteristics	Dimension (feet)
Width	2.00 (handlebar width)
Length	5.75
Height	7.40 minimum
Vertical Pedal Clearance	0.50

FIGURE 6.1
Bicycle and Rider Dimensions

4. Physical fitness and proficiency of the rider
5. Weather and related conditions
6. Trip purpose

Though it is possible to attain speeds approaching 30 mph on a bicycle, normal cycling speeds range from 7 to 15 mph and average 10 mph. Accordingly, 10 mph should be considered the absolute minimum design speed for bicycle facilities, with 15 mph recommended as a desirable working design speed. Where rolling terrain and significant downgrades greater than 5 percent are prevalent, a design speed of 20 mph should be used.

6.1.3. Bicycle Clearances

Perhaps the most critical factor in developing safe and comfortable bicycle facilities is the provision of adequate clearance to a wide variety of potential obstructions that may be found along a prospective route. Standards for lateral and vertical clearance are particularly important in view of the wide range of riding proficiency that is found among experienced and inexperienced riders. Absolute minimum and recommended clearance standards for safe and comfortable bicycle operation are indicated in Table 6.2.

TABLE 6.2
BIKEWAY CLEARANCE STANDARDS

Type of Clearance	Absolute Minimum (feet)	Recommended Standard (feet)
Maneuvering allowances(1)		
- each outside edge (handlebars to edge)	0.75	1.00
- between bicycles, regardless of direction	1.50	2.50
- between bicycles and pedestrians	1.50	2.50
- between bicycles and motor vehicles(2)	4.00	--
Lateral clearances to static obstructions(3)		
- parked cars	1.50	2.00
- curb drop-off	1.50	2.00
- utility poles, trees, hydrants, etc.	0.30	2.00
- soft shoulder	0.30	1.50
- sloped drop-off	0.30	1.00
- raised curb	0.50	1.00
Vertical envelope -- bikeway surface to overhead obstructions	8.30	8.00

(1) Maneuvering allowances should be provided for by additional bikeway pavement width, as specified.
(2) These distances are very tentative and should be subject to considerably more research. Especially important is the relationship between motor vehicle speed and distance of separation. As a preliminary guideline, a 10-foot separation between motor vehicles traveling at 55 mph and bicycles should be considered; a 4-foot separation might be considered at 30 mph.
(3) Lateral clearances can be provided for by either additional bikeway pavement width or by mere distance separation. These clearances should be added to maneuvering allowances.

6.2.
BIKEWAY GEOMETRICS

For all three general classes of bikeways (bike route, bike lane and bike path), geometrics should be developed through the utilization of the standards and operating characteristics identified previously.

6.2.1.
Bikeway Widths

The actual pavement width of a bikeway is dependent upon four factors:

1. Width of the bicycle
2. Maneuvering allowances
3. Clearance between oncoming or passing bicycles
4. "Edge" conditions

Using these factors, absolute minimum and recommended standard widths for one, two, three, and four-lane bikeways are illustrated in Figure 6.2. This figure assumes good "edge" conditions, which include no vertical obstructions, depressions, or soft surfaces next to the bikeway pavement. In actual practice, however, ideal edge conditions are the exception, not the rule. Three typical bikeway applications utilizing varying edge conditions as a basis for design are shown in Figure 6.3.

One-Way Bike Lane at Curb. In this design, an additional two feet should be allowed as curb clearance. Total width for a one-way bike lane at the curb should be 6.0 feet measured from the face of the curb. (This assumes no elevation discontinuity between the gutter surface and the pavement surface.)

One-Way Bike Lane Next to Parking Lane. A minimum clearance of two feet between a parked car and the bicyclist's maneuvering envelope is recommended. In actuality, this standard is probably minimal, for an open car door typically extends 3.5 feet from the car, which is greater than the recommended standard 2.0 foot clearance plus the 1.0 foot maneuvering allowance. The distance between the curb and the inside edge of a one-way bike lane should be a minimum of 14 feet.

Two-Way Off-Street Bike Path. Off-street paths are likely to have good edge conditions, permitting bikeway width to be based solely on maneuvering allowances. A two-way path would desirably be built a minimum of 8.0 feet wide; 10.0 feet wide if it is necessary to accommodate an emergency vehicle.

Sidewalk Bike Path. A sidewalk bike path accommodating significant pedestrian activity should be built to the same width standards as a two-way bike path. A pedestrian consumes approximately the same amount of space (20 inches across the shoulders) as a bicyclist (see Ref. 2). In addition, a 2.5 foot separation between a bicycle and a pedestrian appears reasonable, since this is the standard for moving bicycle separation. An 8 foot wide sidewalk would provide for two comfortable lanes, one each for the pedestrian and the bicyclist, so that where pedestrian/bicycle traffic volumes are not high the bicyclist could easily pass the pedestrian. Where these volumes are high and space is available, physical barriers separating bicyclists and pedestrians would be desirable. However, separate lanes designated by striping

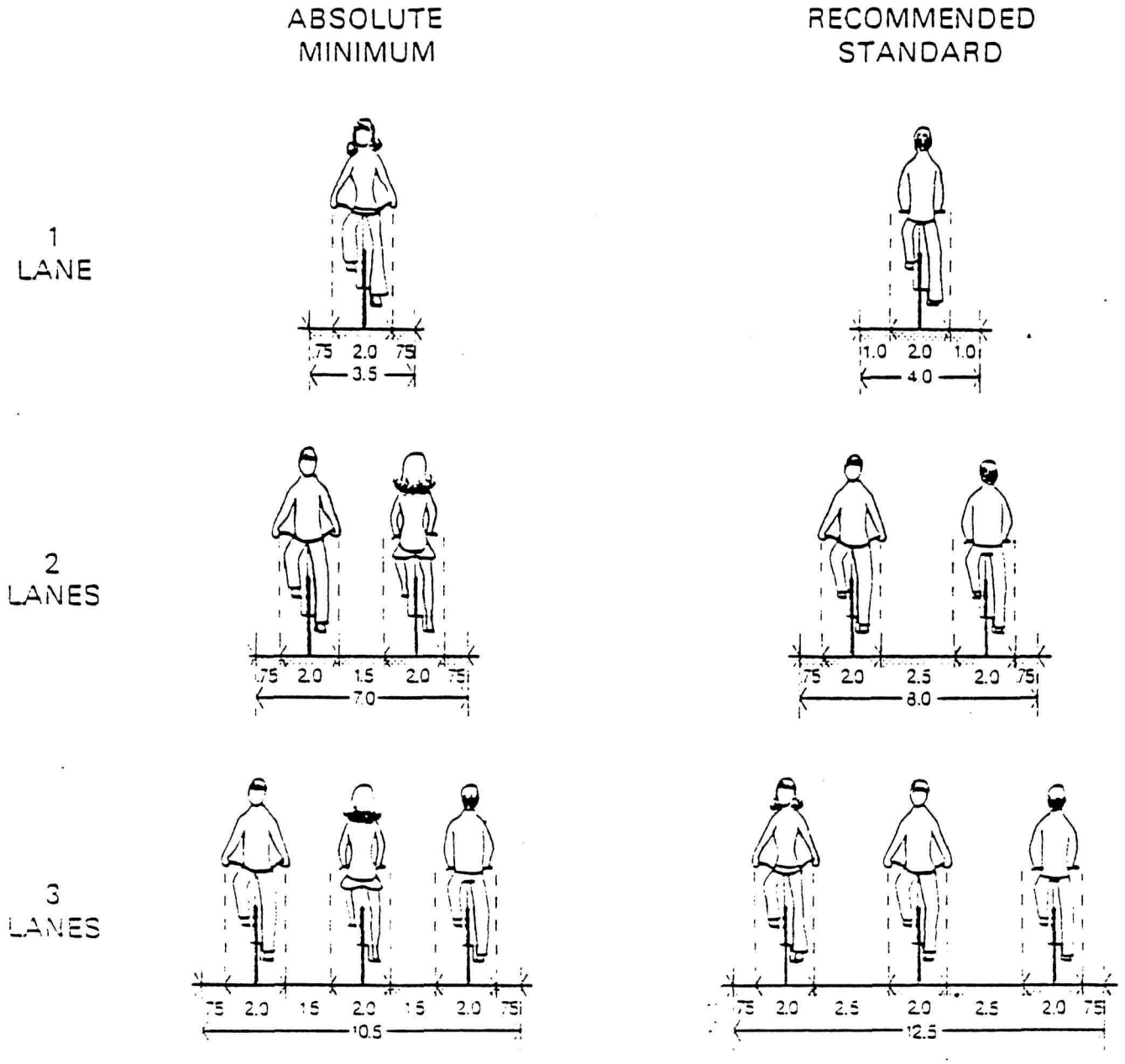

NOTE:
Includes Only Maneuvering Allowances, Not 'Edge' Clearances Such As Soft Shoulders And Raised Curbs

FIGURE 6.2
Minimum and Recommended Maneuvering Clearance Standards

A. ONE-WAY BIKE LANE NEXT TO CURB & GUTTER

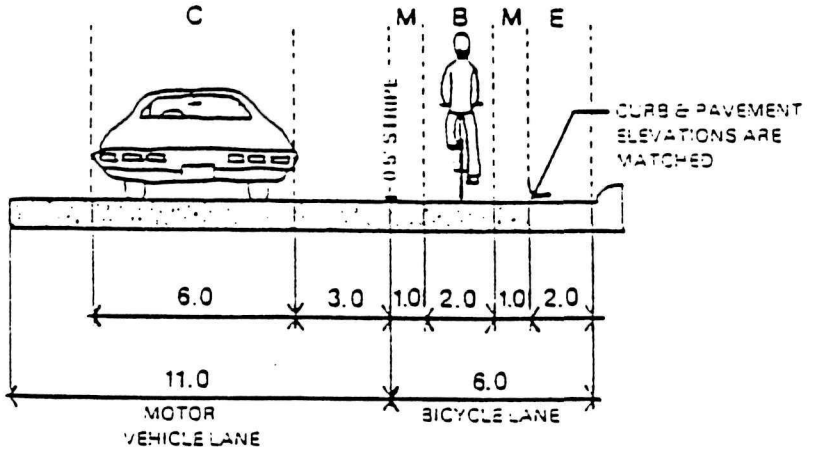

B. ONE-WAY BIKE LANE ADJACENT TO PARKING LANE

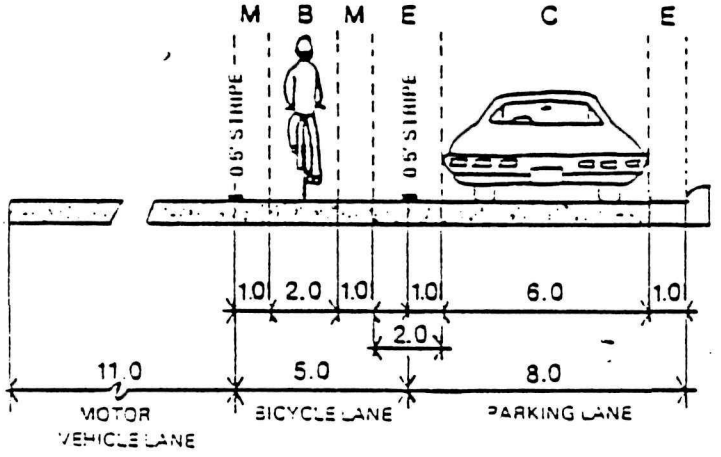

C. TWO-WAY BIKE PATH IN OFF-STREET LOCATION

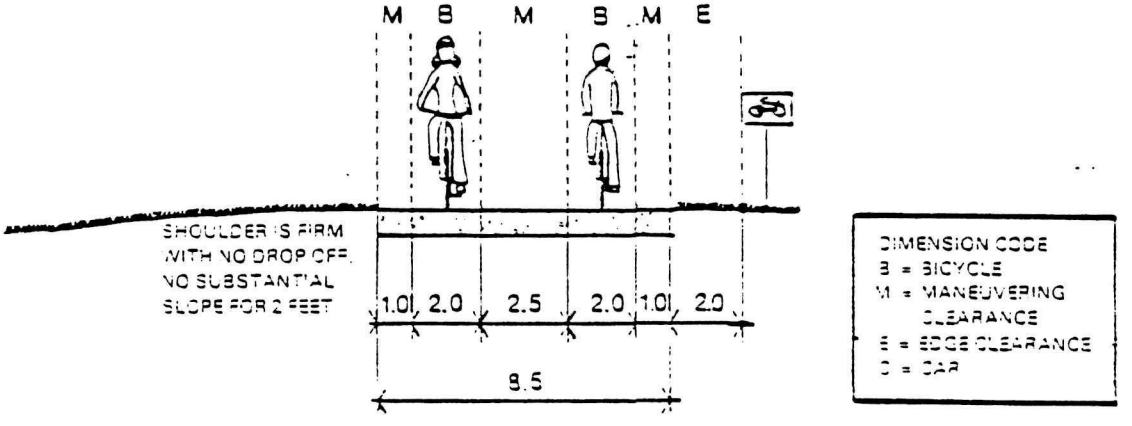

FIGURE 6.3
Typical Bikeway Widths Based on Recommended Maneuvering and Clearance Standards

only are generally not practical to separate pedestrian and bicycle flows, since both pedestrians and bicyclists would tend to use both lanes without a physical barrier.

Highway Bike Lanes and Paths. Special attention to design clearances should be considered in the provision of special bicycle lanes or paths in conjunction with highways. Three possible designs for lanes or paths oriented to highways are shown in Figure 6,4.

A bicycle lane with no barrier (see "A" in Figure 6.4) could be accommodated on a 10-foot shoulder with the four feet of the shoulder furthest away from the traveled surface being specially marked as a bike lane. This will give an effective separation of approximately 10 feet between bicycles and passing high speed motor vehicles.

A protected bicycle lane would require that the physical barrier be placed a minimum of 4.0 feet from the edge of the ~~motor vehicle lane~~ shoulder. Bicycle lanes in this case should be 8.0 feet wide to accommodate two-way bicycling traffic (see "B" in Figure 6.4).

Recognizing that even a 10-foot wide shoulder offers very little protection to the bicyclist in the case of a motor vehicle swerving out of the travel stream (such as in emergency stopping or accident situations), and further recognizing that physical barriers are often not practical, it ~~may~~ would be most desirable to place bike paths a minimum "clear" distance of 30 feet from the edge of the traveled surface (see "C" in Figure 6.4). Studies have shown that this distance would effectively protect the bicyclist from most vehicles involuntarily leaving the traveled surface without the use of physical barriers.

6.2.2.
Bikeway Grades

The grades over which bicyclists can be expected to safely and comfortably travel depend on a number of factors, including:

1. General topography
2. Length of the grade
3. Proficiency of the bicyclist
4. Characteristics of the bicycle
5. Route surface conditions
6. Weather and related factors

Because of the extreme variability of these factors, it is difficult to establish absolute design standards for determining bicycle facility grades. Existing recommendations on acceptable grades generally suggest that grades greater than five percent should be avoided wherever possible over stretches of 100 feet or more. It should be recognized that topographical features or budgetary constraints may often require that existing grades remain unaltered even if it results in inconvenience to cyclists.

The relationship between grades and their length should be viewed as a major consideration in bikeway development. Figure 6.5 illustrates the general relationship between rate and length of grade.

A. BIKE LANE WITH NO BARRIER

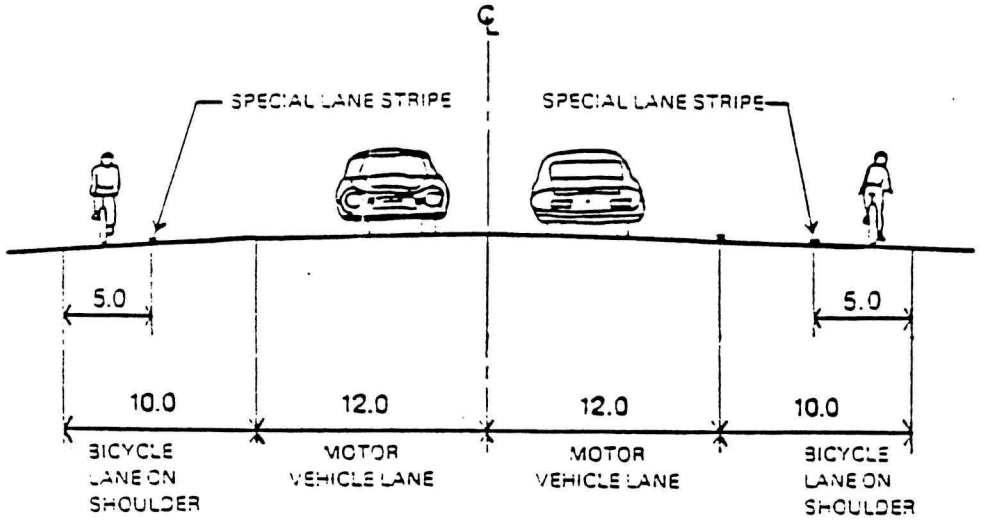

B. BIKE LANE WITH BARRIER

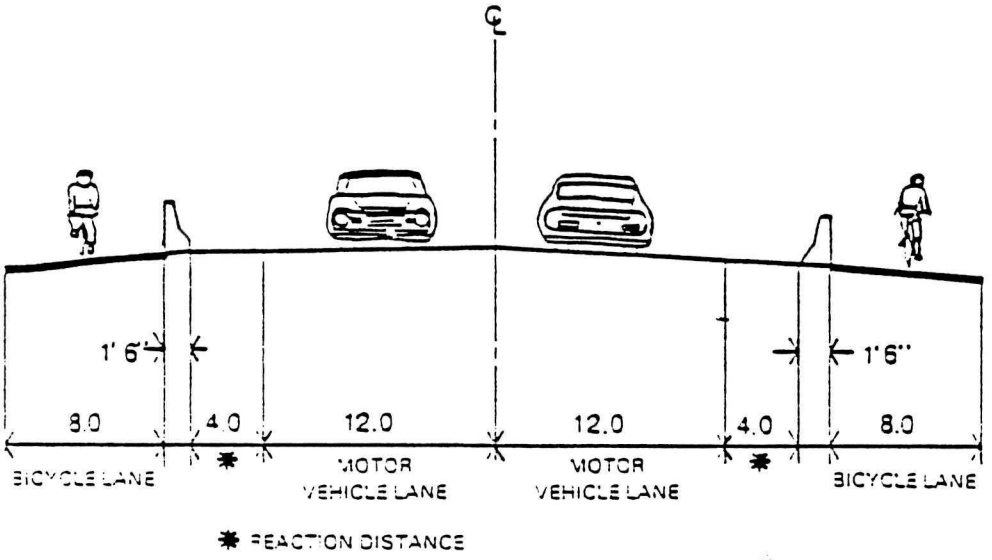

C. BIKE PATH

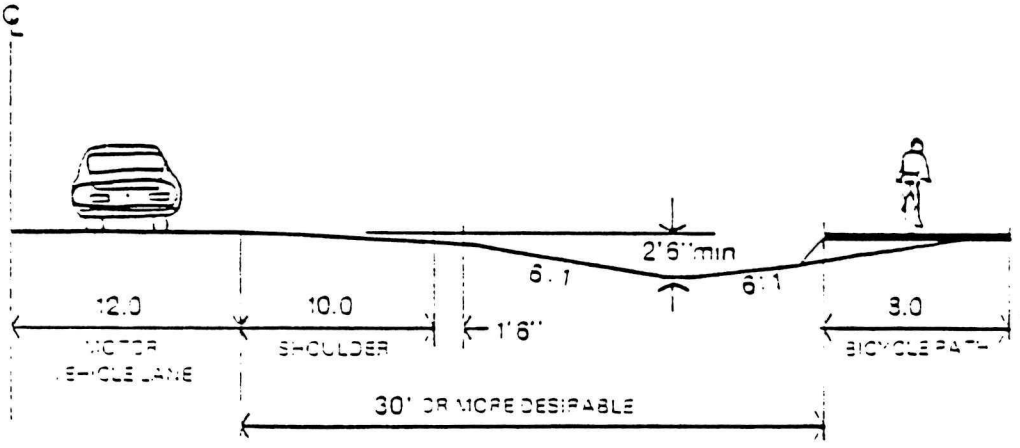

FIGURE 6.4
Typical Design of Highway Bike Lanes and Paths

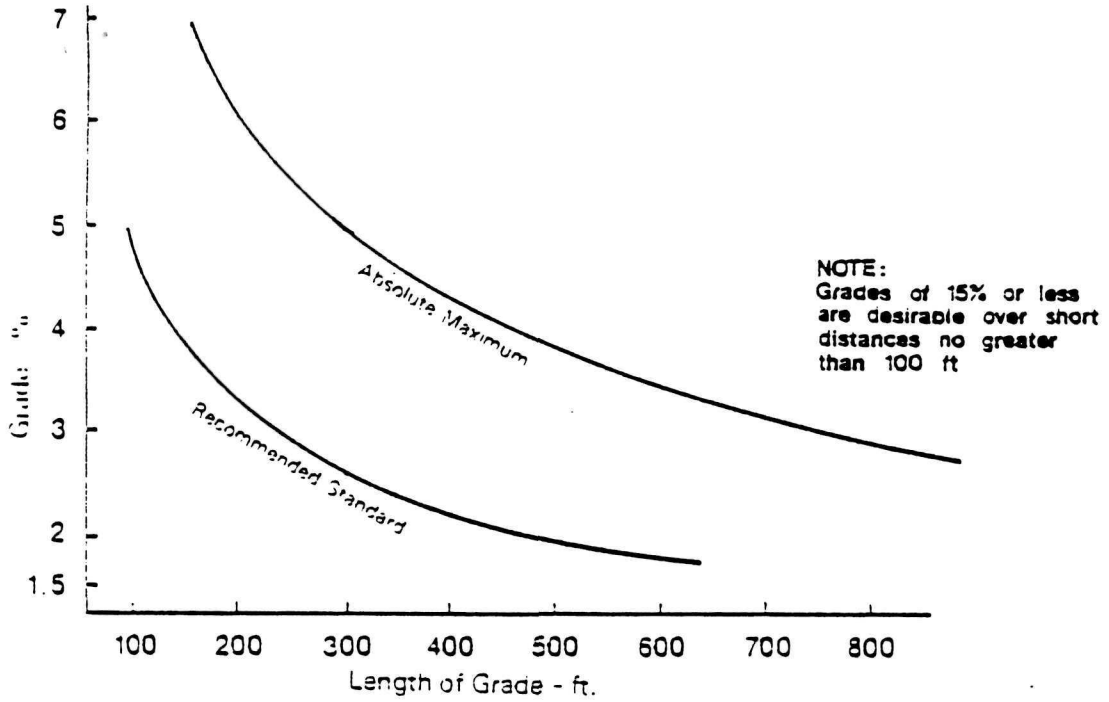

FIGURE 6.5
Relationship of Rate to Length of Grade

The topography in a few sections of the National Capital Region dictates the existence of some steep grades. There are several ways in which bikeway designers can counteract this problem. Possible solutions include: (1) cut and fill, (2) steps with a rail and a sloped path, (3) switchbacks, (4) mechanical devices, and (5) alternate routes. Cut and fill is an ideal solution from the bicyclist's point of view because it would reduce grade and permit the bicyclist to ride rather than walk his bicycle. This solution, however, would be very expensive and would only be suitable for off-street paths. Steps would be most typically be used over very steep but relatively short grades. Switchbacks would be most useful for very long steep grades on off-street paths. Mechanical devices such as lifts or shuttle buses should, of course, be used very selectively in those situations where high use of a special facility exists and access to the facility cannot be provided in other ways. Where bikeways are located on existing streets, the most feasible alternative will probably be rerouting bicyclists along alternative routes with grades which can be more easily negotiated.

6.2.3.
Bikeway Curvature

The degree of curvature that can be safely negotiated on a bicycle is dependent on a number of variables, the most important of which is the design speed of that particular segment of bikeway. As was discussed earlier in this chapter, bicycle operating speeds may range from an average of 10 mph to a maximum of 30 mph, with speeds of 20 mph typically being reached on significant downgrades. Utilizing these figures, a range of acceptable design radii is shown in Table 6.3. The descending grade should determine the design speed on two-way bikeways.

TABLE 6.3
BIKEWAY CURVATURE DESIGN RADII

Design Speed (mph)	(A) Absolute Minimum Radius (1) (feet)	(B) Recommended Radius (2) (feet)
10	14	15
15	20	35
20	27	70
25	33	90
30	39	125

(1) Figures derived from a UCLA test run over level, dry asphalt pavement yielding a relationship whereby $R = 1.25\ V \div 1.4$, where R = the unbraked radius of curvature and V = velocity in mph. It should be noted that absolute minimum radii shown in Column (A) were developed under ideal riding conditions through the cooperation of experienced bicyclists and should be utilized only in situations where it is absolutely certain that similar conditions exist. Where bicycle facilities utilize existing roadway surfaces, roadway curve radii have been designed to accommodate automobile speeds exceeding those normally reached by bicyclists and accordingly are more than adequate for safe, comfortable bicycle operation.

(2) Figures recommended by American Association of State Highway and Transportation Officials in the Guide for Bicycle Planning, AASHTO, 1974 (Ref. 1). Assumes only token super-elevation and, therefore, where super-elevation is provided, these radii might be somewhat reduced.

An added approach to making bikeway curves more safe and comfortable may include providing some degree of super-elevation or banking on all horizontal curves. Some super-elevation is advisable on such curves, but in the absence of available data for determining these rates, the American Association of State Highway and Transportation Officials recommends that a cross slope of 0.02 foot per foot be established as an absolute minimum (the minimum rate required for drainage) and that 0.05 foot per foot be used as a maximum design value (Ref. 1).

It is suggested that widening the pavement width on curves be considered in order to provide increased safety and comfort. By doing so, the tendencies of the bicyclist to "lean into" turns and stray from the centerline

can be accommodated without jeopardizing either his actual or psychological safety or comfort. Figure 6.6 and Table 6.4 indicate the recommended means by which curve-widening designs should be developed. Where curve radii are greater than 100 feet, no widening is required. On curves of less than 100 foot radius, widening is recommended up to a maximum of 4 feet, depending on the radius of the curve and the design speed being used.

TABLE 6.4
BIKEWAY CURVE WIDENING FOR VARIOUS RADII AND DESIGN SPEEDS (1)

Design Speed (mph)	Recommended Curve Widening									
	Absolute Minimum Radii of:					Recommended Standard Radii of:				
	14 ft.	20 ft.	27 ft.	33 ft.	39 ft.	15 ft.	35 ft.	70 ft.	90 ft.	125 ft.
10	4.0	2.8	2.1	1.7	1.4	0.7	1.6	0.8	0.6	0.0
15	*	4.0	3.6	2.4	2.0	*	2.3	1.1	0.9	0.0
20	*	*	4.0	3.2	2.8	*	*	1.6	1.2	0.0
25	*	*	*	4.0	3.4	*	*	1.9	1.6	0.0
30	*	*	*	*	4.0	*	*	2.2	1.7	0.0

* Radii not recommended.
(1) See Table 6.3 for absolute minimum and recommended standard radii for various design speeds.

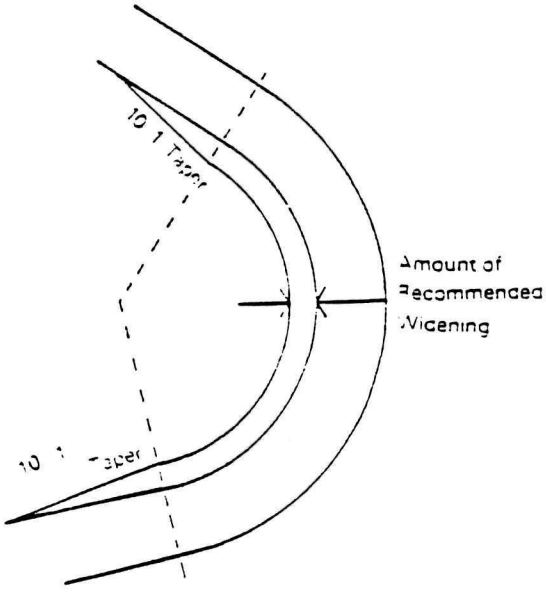

FIGURE 6.6
Curve-Widening Technique

6.2.4.
Stopping Sight Distances

The degree of safety which a bikeway offers relates in part to how easily conflicting cross-movements are perceived, whether they be pedestrians, other bicyclists, automobiles or animals. However, the ability of a bicyclist to react to specified cross-movements is dependent on the stopping sight distance that is provided. Safe stopping sight distances are a function of bicycle speed and the grade profile of the facility. Table 6.5 summarizes recommended stopping sight distances for various design speeds and gradients as developed by the American Association of State Highway and Transportation Officials (Ref. 1).

TABLE 6.5
DESIGN STOPPING SIGHT DISTANCES FOR BICYCLES (Ref. 1)

Design Speed (mph)	Stopping Sight Distances for Downhill Gradients of:			
	0%	5%	10%	15%
10	50 ft.	50 ft.	60 ft.	70 ft.
15	85	90	100	130
20	130	140	160	200
25	175	200	230	300
30	230	260	310	400

NOTE: Design values for stopping sight distances on bikeways can be developed in the same manner as on highways. The values shown in Table 6.5 were based on the following factors and developed by AASHTO:

coefficient of skid resistance = 0.25
perception-reaction time = 2.50 seconds
eye height = 3.75 feet
object height = 6.00 inches

6.2.5.
Vertical Curves

In order to provide a better sense of bikeway continuity and riding quality it is suggested that the use of vertical curves be considered wherever changes in grade are encountered. Safety considerations relating directly to sight distance requirements and grades should be of primary concern. Figure 6.7 shows the minimum length for vertical curves on bikeways based on minimum stopping sight distances.

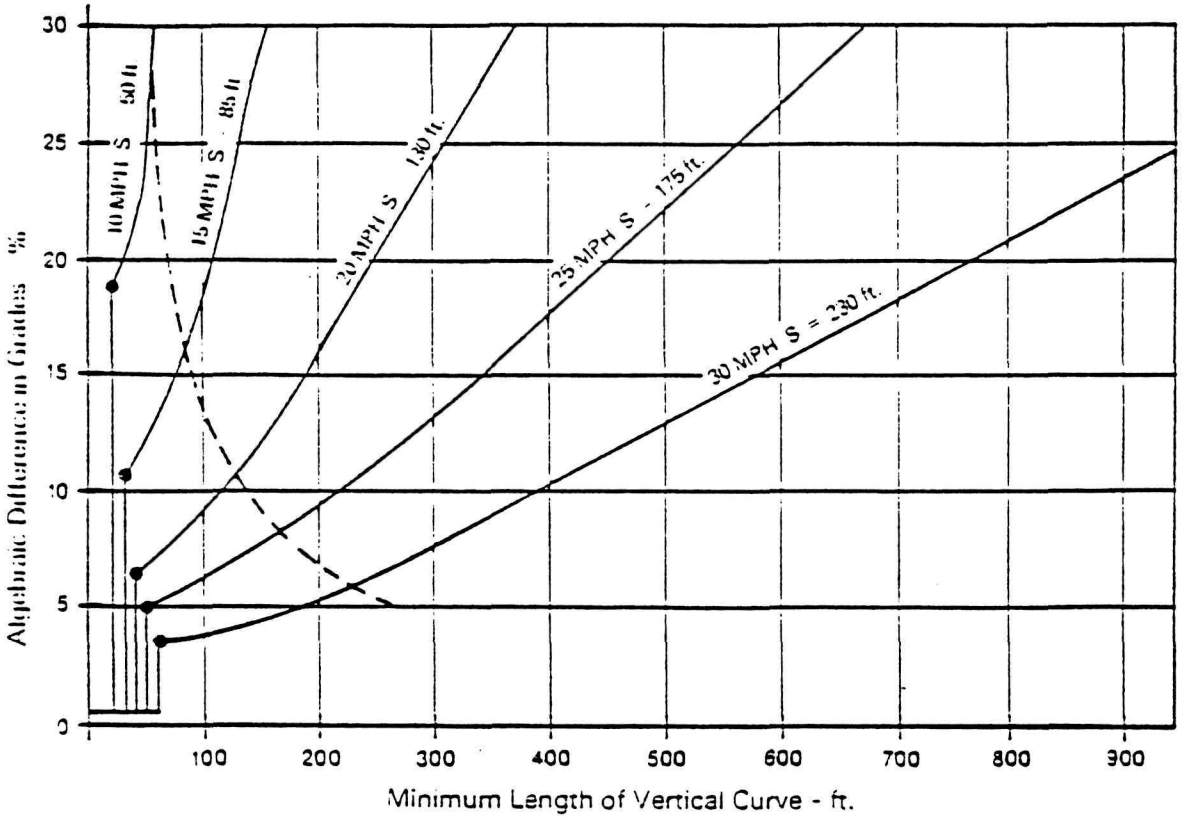

FIGURE 6.7
Length of Vertical Curves

6.3. BIKEWAY MATERIALS AND CONSTRUCTION STANDARDS

6.3.1. Materials and Structural Sections

A variety of subgrade, base and surface materials are available for use in the construction of bicycle facilities. The most appropriate combinations of materials are dependent upon the type of facility being considered and local topographic and soil conditions. The basic design considerations in the construction of adequate bicycle facilities are the loads applied to the facility by bicycles, maintenance vehicles, and emergency vehicles that may also utilize the facility.

In the case of signed bike routes and designated bike lanes, bicyclists will most often share the roadway surface with motorized traffic. Roadway surfaces which are designed to carry motor vehicles are more than adequate structurally to carry bicycle traffic and attendant maintenance vehicles. In instances where additional shoulder pavement is proposed for use as a bikeway, such shoulders should be designed and constructed to normal roadway standards.

The design and construction of bike paths totally separate from the roadway surface involves the consideration of a variety of construction materials and techniques. It is advisable in the layout and design of bike paths to establish reliable data on the soil conditions along the proposed route.

A variety of materials are applicable for use in the construction of bikeway bases and surfaces (see Table 6.6). These include:

1. Stabilized earth
2. Stone chips
3. Soil cement
4. Hot-mix asphaltic concrete
5. Cold-mix asphalt
6. Concrete

Regardless of which type or combination of materials is utilized, the surface should be stable, ideally traversable in wet weather and easily maintained. ~~For high volume utilitarian trip making, it is recommended that~~ an asphaltic material ~~[illegible] be utilized~~ for the riding surface. ~~Where proposed bike paths are more recreational in nature,~~ the use of densely graded crushed aggregate, sand, clay or stabilized earth can provide an effective surface at less cost. The recommended depth of base and surface courses for alternative bikeway structural sections is shown in Figure 6.8.

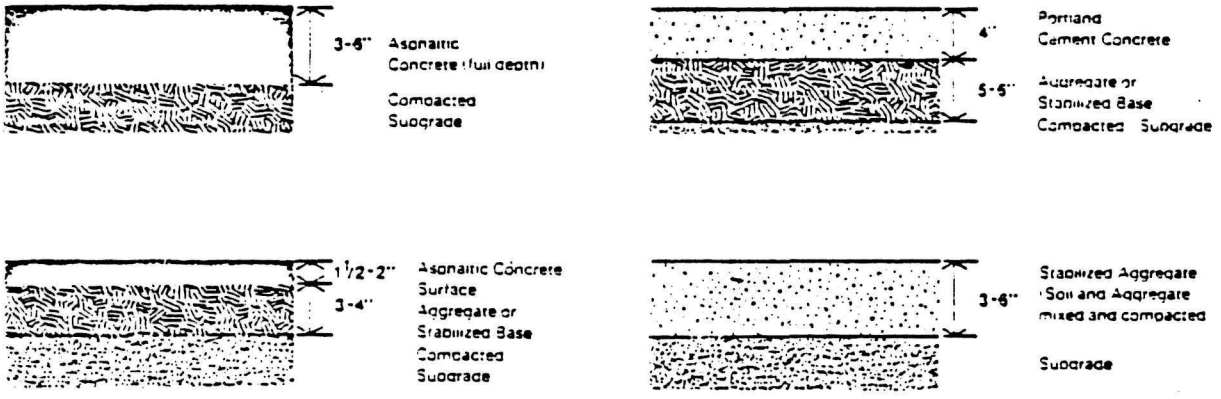

FIGURE 6.8
Typical Pavement Cross Sections

Full Depth Hot-Mix Asphalt. "One design that has been found satisfactory makes use of a full-depth hot-mix asphalt pavement laid directly on the subgrade. The total thickness may vary from 3 to 6 inches depending on the quality of the subgrade... With this design, standard highway mixes can be used provided they are coarse graded with not more than 10 percent air voids. A fine graded aggregate should be used in the surface course to provide a smooth texture. As a rule, asphalt content should be one-half percent higher than that used on a standard highway mix, since the bicycle path will be subject to lighter loads" (Ref. 1).

Asphalt-Aggregate Mix. "Another desirable structural section consists of a 3 to 4 inch aggregate base of either gravel, crushed stone or slag with a 1.5 to 2 inch asphalt surface course. This method is usually preferable to the full depth hot-mix method in that it is more representative of the usual hot-type highway practice and is more economical than the full depth course when the bicycle path is placed on poor quality subgrade" (Ref. 1).

TABLE 6.6
ADVANTAGES AND DISADVANTAGES OF SELECTED BIKEWAY SURFACING MATERIALS

Material	Advantages	Disadvantages	Typical Application
Stabilized earth	Local materials usually adequate, low cost, good base for future surface materials, smooth riding surface in dry weather	Requires considerable maintenance to maintain in good riding condition, not a good all-weather surface, maintenance difficult in wet weather, not suitable for motor vehicle traffic	Low bicycle volume, off-road routes, suitable for mixed pedestrian use
Crushed stone	Low cost when materials are available near site, makes good base for future surface materials	Could cut tires (angular pieces), requires more maintenance than asphaltic or concrete surfaces, needs local supply, not a good all-weather surface, not suitable for heavy motor vehicle traffic	Low bicycle volume, off-road routes, suitable for mixed pedestrian use
Soil cement	Local materials usually adequate, relatively smooth riding surface, easy maintenance, good base for future surface materials	Surface is prone to erosion, surface can become rough, not suitable for heavy motor vehicle traffic	Low bicycle volume, off-road routes
Hot-mix asphaltic concrete	Long service life, easy to maintain, all-weather surface, smooth riding surface, most durable in freeze-thaw situations	High cost, possible future materials shortage	High volume, off-road paths or on-street lanes
Cold-mix asphalt	Same attributes as hot-mix plus access to remote places, can stockpile	Same as hot-mix but higher construction costs due to more labor requirements	High volume off-road paths or on-street lanes
Concrete	Longest service life, low maintenance, smooth riding surface, takes heavy loads, all-weather surface	Construction joints can be bumpy, highest construction cost	High volume, off-road paths

Portland Cement. "Portland cement concrete may be used for surfacing bicycle paths. A structural section of the type normally utilized for pedestrian walks is adequate for bicycle traffic, but a heavier section is necessary where maintenance vehicles must use the path" (Ref. 1).

Stabilized Soil. A stabilized soil surfacing may work satisfactorily where local soil and aggregate conditions permit a good compacting mixture. Generally, however, such treatment should be used only on lower volume paths. Such surfacing will typically have a lower initial cost.

Gap-Graded Asphalt. The use of a porous asphalt, sometimes referred to as "ecological paving", overlaid on a base of permeable crushed stone, may provide significant additional advantages in bikeway construction in terms of cost savings and improved riding characteristics. Gap-graded asphalt applied over a crushed stone base allows water to drain through the wearing course and base course, directly into the underlying soil, increasing skid resistance and eliminating water sheeting. As a result, the need for associated drainage systems is greatly reduced and potential flooding may be averted as well. At this time very little data exists on the use and long term performance of porous asphalt. However, it is believed that it will successfully resist clogging, greatly reduce the possibility of frost damage and will not allow vegetation growth through the base. In addition, to the extent that it eliminates or reduces the need for special drainage systems, significant cost savings may be achieved through its use. Additional information on the use and performance of porous asphalt may be obtained from the Franklin Institute in Philadelphia, the U.S. Environmental Protection Agency or the Federal Highway Administration.

The use of any of the recommended bikeway pavement cross-sections shown in Figure 6.8 is dependent upon local characteristics including topography, climate and soil composition. However, it is possible to summarize the relative advantages and disadvantages of the various pavement materials as described above. Reference to Table 6.6 may assist in the selection of the most appropriate bikeway surface in a particular area.

6.3.2. Construction Considerations

In the design and construction of bikeways, particularly separate bike paths, major consideration should be given to the cost implications of man versus machine-laid surfaces. Mechanical spreaders providing a typical pavement width of 8 or 12 feet often result in actual cost savings per ton of pavement laid, in comparison to the cost of narrower pavements laid by hand. Also, in determining the width and clearance to be provided along a bikeway, the size dimensions and clearance requirements of construction and maintenance equipment must be taken into consideration as well as the cost of additional equipment to be provided for these purposes.

6.4. BIKEWAY DELINEATION STANDARDS

The identification or delineation of all types of bicycle facilities is necessary for three basic purposes:

1. *Regulations* - Regulatory signs and markings inform bicyclists as well as

non-bicyclists of laws, regulations and legal requirements which are in force at or in the area where such signs are found.

2. *Warnings* - Warning signs and markings are utilized to identify potentially hazardous conditions on or near a particular facility which requires extra caution in the interest of safety.
3. *Guides* - Guide signs and markings assist in providing information that will direct bikeway users along the most simple and direct route available by identifying intersecting routes, important destinations, directions and points of interest.

These definitions, derived from the U.S. Department of Transportation, Manual on Uniform Traffic Control Devices (Ref. 22), find important application in the development of appropriate methods and standards for the delineation of bikeways.

6.4.1. Bikeway Signing

Regardless of the type of bikeway that is being proposed, adequate signing for each of the purposes cited above is desirable. Table 6.7 presents the dimensions, messages and related characteristics of signs recommended for application on various classes of bicycle facilities. In addition to the signs identified in the table, bicyclists will need a variety of related information which is typically provided to the motorist through additional official standard signs. These may include the "curve", "winding road", "stop ahead", "slide area", "yield ahead", "hill", "loose gravel", "RR tracks", "sewer grates", "road narrows", "right turn only" lanes and "bus only" lanes.

Because of the present lack of uniformity in signing for the bicycle, it may become necessary to develop additional specific signs to better fit particular local circumstances. To the extent possible, standard signs, identified as "Official" in Table 6.7, should be utilized wherever appropriate on all classes of bikeways. Where new signs are required due to local circumstances, they should be developed in accordance with the standards and recommendations specified in the Manual on Uniform Traffic Control Devices (Ref. 22).

The placement, location and frequency of various signs associated with or necessary for safe, comfortable bicycle operation should be subject to the following general principles:

1. "Adequate signing should be provided at all decision points along the route. Such signing may consist of signs informing the bicyclist of upcoming directional changes and confirmation signs to ensure that route direction has been properly comprehended."

2. "Route or guide signs should be provided at regular intervals so that newcomers are informed that they are traveling on an officially designated bicycle route and all bicyclists are properly advised of the route."

3. "Adequate motorist warning signs should be posted wherever a bicycle route crosses a roadway, when a bicycle route begins or ends, or at any other points where high volumes of bicycles may be encountered."

TABLE 6.7
BIKEWAY SIGN CHARACTERISTICS AND STANDARDS

Sign Type	Sign	Purpose	Status	Size(1)	Legend(2)	Materials(3)	Reflectorization Illumination	Comments
BIKE		Identification of predetermined route over any safe and suitable surfaces	OFFICIAL, mandatory, as designated in the Manual of Uniform Traffic Control Devices	24x18"	White on green with border; 3" Series C letters with bicycle symbol	Variable	Not required	Application on all classes of bikeways
	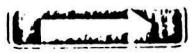	Identification of directional changes in designated route	OFFICIAL, for use as required	24x6"	White on green with border	Variable	Not required	To be placed directly below BIKE ROUTE sign; application on all classes of bikeways
		Direct cyclists to bike route from areas where route designation is not possible	For use as required	TO marker 24x12" BIKE ROUTE 24x18" Directional arrow 21x15"	Black on white with border White on green with border Black on white with border	Variable	Not required	Might be utilized in high generator areas (e.g., shopping centers, schools) where parking, open space, etc., separates route from destinations
		Identification of end of safe, suitable route	For use as required	END marker 24x12" BIKE ROUTE 24x18"	Black on white with border White on green with border	Variable	Not required	Might be utilized with BEGIN BIKE ROUTE indication having same design characteristics; application on all classes of bikeways
(NOT ESTABLISHED)		Identification of parking/storage facilities	--	--	--	--	--	Design based on standard "Parking" sign
		Identification of bikeway	National Park Service #RS-066	Variable; minimum 6x6"	White on brown with border; NPS Modified Clarendon type style	Plastic sheeting with weathering steel rectangular tubing supports	Where necessary	Application on all classes of bikeways or as map graphics

TABLE 6.7 (continued)
BIKEWAY SIGN CHARACTERISTICS AND STANDARDS

Sign Type	Sign	Purpose	Status	Size(1)	Legend(2)	Materials(3)	Reflectorization Illumination	Comments
		Identification of hiking trail	National Park Service #RS 068	Variable; minimum 6x6"	White on brown with border; NPS Modified Clarendon type style	Plastic sheeting with weathering steel rectangular tubing supports	Where necessary	Application in conjunction with all classes of bikeways or as map graphics
		Identification of horseback riding trail	National Park Service #RS 064	Variable; minimum 6x6"	White on brown with border; NSP Modified Clarendon type style	Plastic sheeting with weathering steel rectangular tubing supports	Where necessary	Application in conjunction with all classes of bikeways or as map graphics
WARNING	 BIKE XING	For use in advance of point where official bikeway crosses road	OFFICIAL; for use as required	30x30" (diagonal position) 24x18"	Black on yellow with border Black on yellow with border	Variable	Recommended	Application in conjunction with all classes of bikeways
WARNING	("WATCH FOR BIKES")	For use as supplemental warning with bikeway identification signs	--	30x30" (diagonal position)	Black on yellow with border	Variable	Recommended	Application in conjunction with all classes of bikeways
		For use in advance of point where bike path crosses hiking path, sidewalk, etc.	National Park Service #RS-016		White on brown with border; NPS Modified Clarendon type style	Plastic sheeting with weathering steel rectangular supports	Where necessary	Application in conjunction with all classes of bikeways or as map graphics
REGULATORY	 NO BICYCLES	Prohibition of bicycles from specific facilities or rights of way	OFFICIAL; for use as required	24x24" 24x18"	Black on white bike symbol with border and red prohibitory circle overlaid Black on white with border	Variable	Not required	
	PEDESTRIANS AND BICYCLES PROHIBITED	Prohibition of bikes, pedestrians on specific facilities or rights-of way	OFFICIAL; for use as required	30x18"	Black on white with border	Variable	Not required	
	PEDESTRIANS BICYCLES MOTOR DRIVEN CYCLES PROHIBITED	Prohibition of selected vehicles, pedestrians from specific facilities or rights of way	OFFICIAL; for use as required	30x36"	Black on white with border	Variable	Not required	

TABLE 6.7 (continued)
BIKEWAY SIGN CHARACTERISTICS AND STANDARDS

Sign Type	Sign	Purpose	Status	Size(1)	Legend(2)	Material(3)	Reflectorization Illumination	Comments
REGULATORY	PEDESTRIANS PROHIBITED	Prohibition of pedestrians from specific facilities or rights-of way	OFFICIAL, for use as required	24x12"	Black on white with border	Variable	Not required	For application where bikes and pedestrians are to use separate facilities
	("NO MOTOR VEHICLES")	Prohibition of motor vehicles from specific facilities or rights-of way	--	--	--	--	--	Design based on European standard sign
	("MOTOR DRIVEN CYCLES PROHIBITED")	Same as above	--	--	--	--	--	
	TURNING VEHICLES YIELD TO BIKES	Establish bicycle right-of-way through selected intersections	--	30x36"	Black on white with border	Variable	Recommended	Application on bike routes and bike lanes
	BIKE LANE ONLY ↙	Establish bicycle right-of-way along shared or adjacent facilities	--	30x36"	Black on white with border	Variable	Recommended	Application on bike routes and bike lanes to clarify shared and/or adjacent rights-of-way
		Indicates activity is prohibited	National Park Service "Prohibiting Slash"	Variable; minimum 6x6"	Red slash over white on brown with border; NPS Modified Clarendon type style	Plastic sheeting with weathering steel rectangular supports	Where necessary	For application where a specific activity is prohibited
		Establishes bicycle and pedestrian right-of way along shared or adjacent facility	Not official signs	--	--	--	--	Signs used in Davis, California; examples of signing for joint bicycle/pedestrian facilities
REGULATORY		Prohibits bicycles from sidewalks or pedestrian paths	Not an official sign	--	--	--	--	Sign used in Davis, California; example only.
INFORMATION		Identification of trail shelter	National Park Service #RS-043	Variable; minimum 6x6"	White on brown with border; NPS Modified Clarendon type style	Plastic sheeting with weathering steel rectangular tubing supports	Where necessary.	Application in conjunction with all classes of bikeways or as map graphics

TABLE 6.7 (continued)
BIKEWAY SIGN CHARACTERISTICS AND STANDARDS

Sign Type	Sign	Purpose	Status	Size(1)	Legend(2)	Material(3)	Reflectorization Illumination	Comments
Information		Identification of sleeping shelter	National Park Service #R5-017	Variable, minimum 6x6"	White on brown with border; NPS Modified Clarendon type style	Plastic sheeting with weathering steel rectangular tubing supports	Where necessary	Application in conjunction with all classes of bikeways or as map graphics
		Identification of campground area	National Park Service #R5-018	Variable; minimum 6x6"	White on brown with border, NPS Modified Clarendon type style	Plastic sheeting with weathering steel rectangular tubing supports	Where necessary	Application in conjunction with all classes of bikeways or as map graphics
		Identification of shower facilities	National Park Service #R5-035	Variable, minimum 6x6"	White on brown with border; NPS Modified Clarendon type style	Plastic sheeting with weathering steel rectangular tubing supports	Where necessary	Application in conjunction with all classes of bikeways or as map graphics
		Identification of restrooms	National Park Service #R5-022	Variable minimum 6x6"	White on brown with border, NPS Modified Clarendon type style	Plastic sheeting with weathering steel rectangular tubing supports	Where necessary	Application in conjunction with all classes of bikeways or as map graphics
		Identification of lodging facilities	National Park Service #R5-013	Variable minimum 6x6"	White on brown with border, NPS Modified Clarendon type style	Plastic sheeting with weathering steel rectangular tubing supports	Where necessary	Application in conjunction with all classes of bikeways or as map graphics
		Identification of eating facilities	National Park Service #R5-019	Variable minimum 6x6"	White on brown with border, NPS Modified Clarendon type style	Plastic sheeting with weathering steel rectangular tubing supports	Where necessary	Application in conjunction with all classes of bikeways or as map graphics
		Identification of food stores	National Park Service #R5-020	Variable minimum 6x6"	White on brown with border; NPS Modified Clarendon type style	Plastic sheeting with weathering steel rectangular tubing supports	Where necessary	Application in conjunction with all classes of bikeways or as map graphics

TABLE 6.7 (continued)
BIKEWAY SIGN CHARACTERISTICS AND STANDARDS

Sign Type	Sign	Purpose	Status	Size(1)	Legend(2)	Material(3)	Reflectorization Illumination	Comments
Information		Identification of picnic areas	National Park Service #RS-044	Variable minimum 6x6"	White on brown with border; NPS Modified Clarendon type style	Plastic sheeting with weathering steel rectangular tubing supports	Where necessary	Application in conjunction with all classes of bikeways or as map graphics
		Identification of drinking water facilities	National Park Service #RS-013	Variable minimum 6x6"	White on brown with border; NPS Modified Clarendon type style	Plastic sheeting with weathering steel rectangular tubing supports	Where necessary	Application in conjunction with all classes of bikeways or as map graphics
		Identification of first aid facilities	National Park Service #RS-024	Variable minimum 6x6"	White on brown with border; NPS Modified Clarendon type style	Plastic sheeting with weathering steel rectangular tubing supports	Where necessary	Application in conjunction with all classes of bikeways or as map graphics
		Identification of telephone location	National Park Service #RS-025	Variable minimum 6x6"	White on brown with border; NPS Modified Clarendon type style	Plastic sheeting with weathering steel rectangular tubing supports	Where necessary	Application in conjunction with all classes of bikeways or as map graphics

(1) Along bike routes and bike lanes where both motorists and bicyclists are dependent on adjacent signing, sign size should be standard, as developed for motor vehicles; along separate bike paths, sign size may be reduced and still allow the bicyclist adequate perception and reaction time.
(2) Except in cases where letters need to exceed 8" in height, lettering should be upper case (capitals) in format designated in the Manual on Uniform Traffic Control Devices (Ref. 22) or as designated by the National Park Service.
(3) Unless otherwise specified, a variety of materials may be utilized in sign construction.

#52

4. "In urban areas, warning signs directed toward motorists should be positioned a minimum of one-half block in advance of any point where bicycles may be encountered."

5. "Warning signs informing bicyclists of potential hazards should be positioned along all types of bicycle facilities not less than 50 feet in advance of the hazardous condition" (Ref. 1).

Signs utilized along bike routes and bike lanes, because of the bicyclist's proximity to motorized traffic, should be subject to the lateral and vertical clearances regularly required along streets and highways. Along separated bike path facilities, however, lateral and vertical clearances for signs can be somewhat reduced to correspond to the particular bicycle clearance requirements cited previously in Section 6.1.3.

The location of warning signs in relation to the circumstances to which they refer can generally be the same for motorists and bicyclists. However, because of the bicyclist's lower speed, consideration may be given to placing bicycle-oriented warning signs somewhat closer to the condition in question than is typically required for motor vehicle traffic. In any case, warning signs identifying conditions which may be hazardous to the bicyclist should be located no less than 50 feet in advance of such conditions.

6.4.2.
Striping and Pavement Markings

Striping and pavement markings represent an important supplement to the use of selected signs in the designation and delineation of bike lanes and bike paths. Frequently, the bicyclist's attention and field of vision are directed down or below that of the pedestrian and motorist; therefore, hazard warnings appearing on the pavement are often be more recognizable than signed warnings. Also, the use of striping and pavement markings represents an invaluable means of establishing travel rights-of-way and respective motor vehicle and bicycle travel lanes, particularly for on-street bike lanes.

In general, striping and pavement markings are utilized for the same purposes outlined above in the discussion of signing. They provide guidance, hazard warnings and regulatory information for both the motorist and the pedestrian, as well as the bicyclist. In particular, striping or the placement of a variety of longitudinal lines in conjunction with the designation of bikeways is intended to symbolize the separation of rights-of-way for vehicles, bicycles and pedestrians. Pavement marking symbols and words, on the other hand, are intended only to supplement proposed signing and striping along either bike lanes or separate bike paths.

Although uniformly accepted standards have not been specifically developed for the use of pavement markings and striping along bikeways, the principles presented in the Manual on Uniform Traffic Control Devices (Ref. 22) should be adhered to in regard to the use of color, the size of markings and the configuration of various lines and markings. In general, the following pavement marking guidelines are to be followed:

"Longitudinal pavement markings shall conform to the following basic concepts:
1. Yellow lines delineate the separation of traffic flows in opposing

directions or mark the left boundary of the travel path at locations of particular hazard.
2. White lines delineate the separation of traffic flows in the same direction.
3. Red markings delineate roadways that shall not be entered or used by the viewer of those markings.
4. Broken lines are permissive in character.
5. Solid lines are restrictive in character.
6. Width of line indicates the degree of emphasis.
7. Double lines indicate maximum restrictions.
8. Markings which must be visible at night shall be reflectorized unless ambient illumination assures adequate visibility."

"The widths and patterns of longitudinal lines shall be as follows:
1. A normal width line is 4" to 6" wide.
2. A wide line is usually twice the width of a normal line.
3. A double line consists of two normal width lines separated by a discernable space.
4. A broken line is formed by segments and gaps ... " (Ref. 22).

In addition to the use of various longitudinal line segments along bike routes and bike lanes, word and symbol markings provide special emphasis in particular circumstances. The size of various pavement markings, symbols and words is dependent on the exact dimensions of the bikeway under consideration. Longitudinal markings should follow the general guidelines cited above in terms of width and color, while words and symbols should be as large as possible in view of proposed bike path or lane widths. Table 6.8 summarizes standards for the design and location of various types of striping and pavement markings recommended for use in the development of bike lanes and bike paths.

As is the case with signs, the undue proliferation of pavement markings should be avoided. The combined effectiveness of both signs and pavement markings is dependent upon their simplicity, legibility and direct appropriateness under particular circumstances. Prior to the placement of pavement markings, the justification for their need and a plan for the simplest and most direct combination of signs and markings should be developed, based on local circumstances. Figures 6.9 and 6.10 show typical applications of recommended signing, striping and pavement markings.

6.4.3.
Barriers

The development of protected bike lanes requires the use of one of several types of barriers which serve to physically, as well as symbolically, separate the bicyclist from other traffic. The use of such barriers results in potentially greater increases in safety as well as greater psychological comfort for bicyclists.

There are a number of materials and designs that may be effectively used as barriers, ranging from the use of landscaping elements to the construction of full size fencing or rail schemes, each offering varying degrees of separation and protection.

TABLE 6.8
STRIPING AND PAVEMENT MARKING STANDARDS

Type	Diagram	Purpose	Dimensions	Application[2]	Comments
Longitudinal Striping					
Solid line		Symbolic separation of bicycle, motor vehicle lanes; crossing not permitted	4-6" width	Bike Lane Designation; runs full length between areas where cross traffic is allowed	
Broken line[1]		Symbolic separation of bicycle, motor vehicle lanes; crossing permitted	4-12" squares; 6-18" spacing (2:3 ratio)	All Bikeway Classes; located at driveways, intersections, etc. where cross traffic is encountered	Size of "dots" should be related to degree of hazard, i.e. larger where utilized at intersections
Stop line		Identify point at which all vehicles are required to stop; optional	12-24" width	All Bikeway Classes; to extend across all approaching traffic lanes	To be used only in conjunction with STOP sign or signal
Symbols					
Bicycle		Symbolic identification of bike-only lane - for all adjacent vehicles, etc.	7.0'x3.5' (standard)	Bike Lane and Bike Path; for use at beginning of specific bikeway segments as supplement to BIKE ROUTE sign; optional	Represents alternative to "BIKEWAY" or "BIKE ONLY" markings
"Yield"		Regulation emphasis; optional; standard	4' height	Bike Lane and Bike Path; where appropriate	Optional
"Slow"		Warning of hazardous conditions; standard	4' height	Bike Lane and Bike Path; in areas where sight distance is bad, multiple curb cuts, etc.	Optional
"RR"		Warning; standard	4' height	Bike Lane and Bike Path; as required	Optional

(1) Minimum segment size to relate to lane stripe (4-6"); spacing ratio (Ref. 3).

(2) All pavement markings, with the exception of solid lines used to separate lanes on multi-lane facilities, should be of white reflectorized paint.

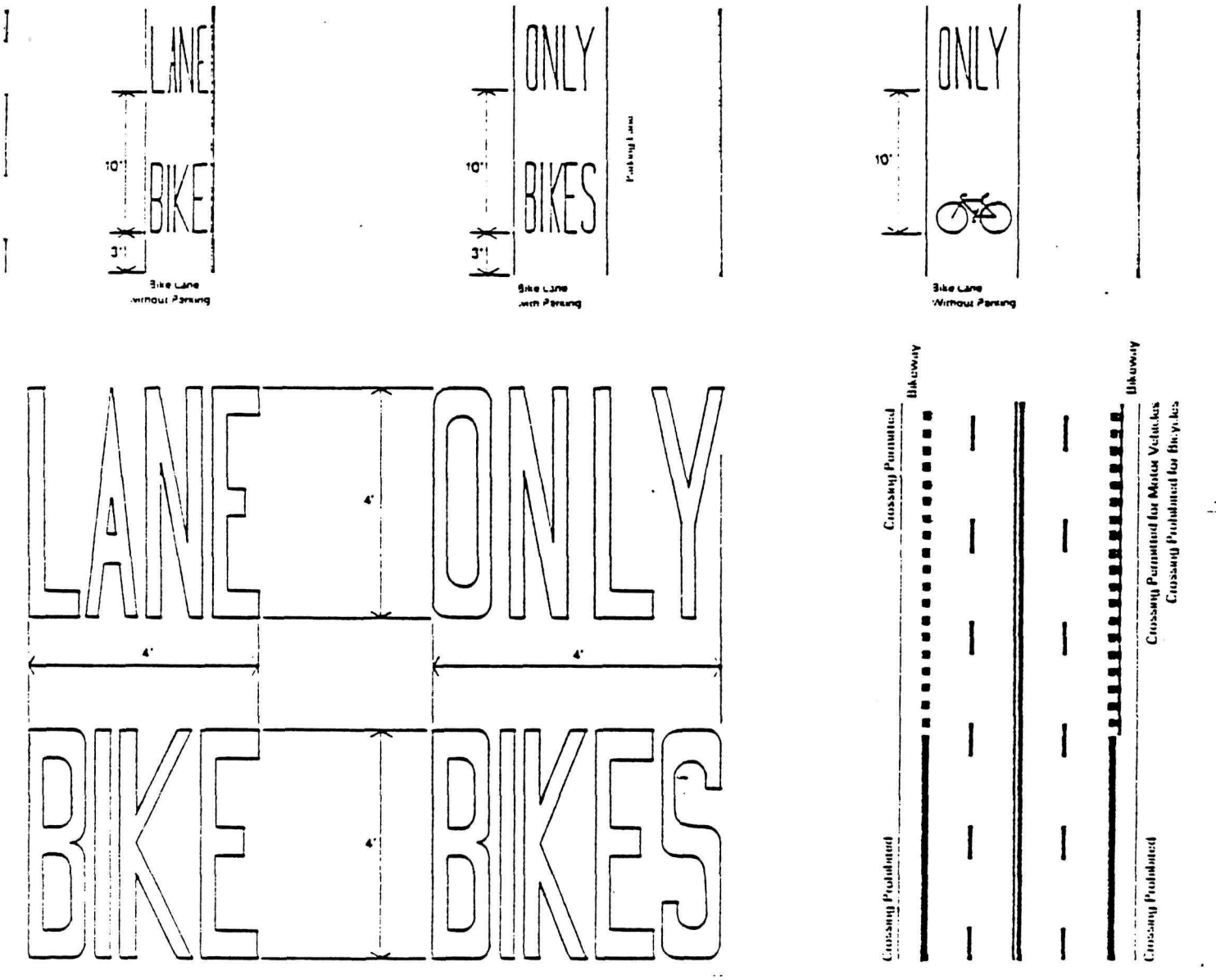

FIGURE 6.9
Typical Application of Bike Lane Striping and Pavement Marking Standards

It should be noted that the use of barriers, in comparison to the solid painted line of an unprotected bike lane, may represent a significant increase in costs, in terms of materials, installation costs and maintenance costs. Table 6.9 illustrates the types of barriers which might be considered in the construction of a protected bike lane.

6.5. GRADE SEPARATIONS

The safety problems resulting from conflicts between motor vehicles and bicycles as well as bicycles and pedestrians are best solved through the total separation of these modes of travel at critical points, particularly at intersections. However, grade separations such as overpasses and underpasses often are not feasible because of the unavailability of necessary right-of-way and the extremely high

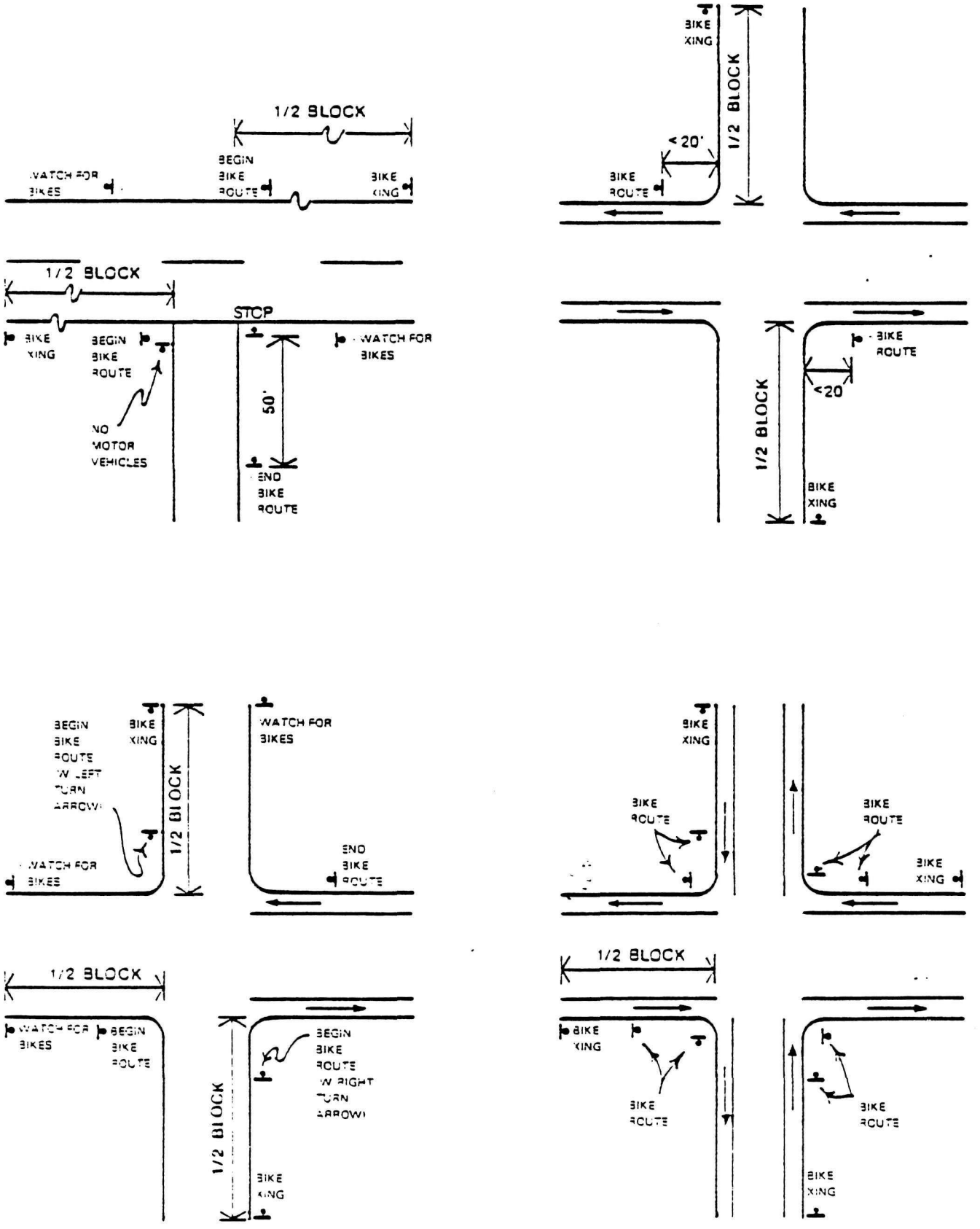

FIGURE 6.10
Typical Application of Bike Lane Signing, Striping and Pavement Marking Standards

TABLE 6.9
TYPES AND CHARACTERISTICS OF BARRIERS FOR PROTECTED BIKE LANES

Type	Design[1]	Materials	Size	Other Features	Advantages/Disadvantages
Plantings		Hardy shrubs, hedgerow	Width variable dependent on growing requirements of plant material	Continuous strip	Provides pleasant separation; may require prohibitively large amount of roadway or horizontal separation; may become maintenance problem LIMITED APPLICATION
Pavement Markers (mushroom buttons, rumble bumps)	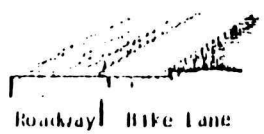	Std. Roadway design; (high impact plastic, rubber)	Variable; usually 1" or less in height	Spacing is variable, should be close for Bike Lane application; can be reflectorized	Provides audio and tactile signal to driver; requires no more roadway than stripe; compatible with roadway maintenance equipment; provides little physical separation; low maintenance
Tubular Markers		Std. Roadway design (high impact plastic, rubber)	Variable diameter; 18" std. height	Spacing is variable, should be close enough to contain motor vehicles and bikes in respective lanes; can be mounted semi-permanently in sleeves	Provides physical separation; requires very little roadway width; moderate maintenance, replacement problem; offers no real protection
Conical Markers	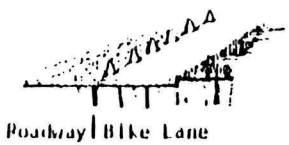	Std. Roadway design (high impact plastic, rubber)	Variable diameter; 18" std. height	Spacing variable, should be close enough to contain motor vehicles and bikes in respective lanes; good temporary or trial barrier material	Provides physical separation; difficult to permanently attach; requires moderate to heavy maintenance; offers no real protection LIMITED APPLICATION
Mountable raised curb[2]		Extruded asphalt or concrete	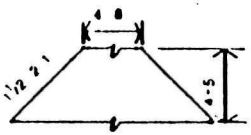	Continuous strip; height to allow cautious vehicle crossing; minimize width; paint to highlight; use on reasonably long stretches where few crossings required	Provides physical separation and protection; allows selected crossing; requires reasonable amount of pavement width LIMITED APPLICATION

TABLE 6.9 (continued)
TYPES AND CHARACTERISTICS OF BARRIERS FOR PROTECTED BIKE LANES

Type	Design	Materials	Size	Application	Advantages/Disadvantages
Non-mountable raised curb[2] (2 alternatives)	 Roadway|Bike Lane	asphalt, concrete	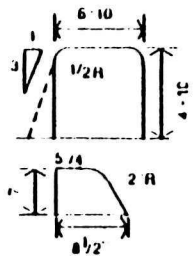	Continuous strip; paint to highlight; for use on long stretches where no encroachment required	Optimum physical separation and protection LIMITED APPLICATION
Pre-cast curb segments[2] (3 alternatives)	 Roadway|Bike Lane	concrete	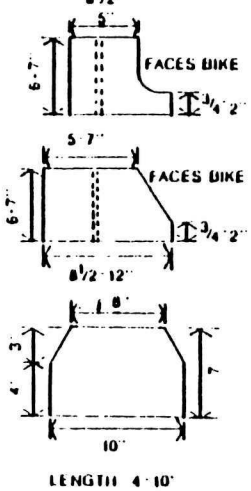	Spiked or pegged into pavement at close intervals	Optimum physical separation and protection; flexibility in application; can be stocked, reused; requires little roadway surface
Fencing and guard rails	Highway standards	- wire mesh - cable - rail - concrete	Highway standards	Where this level of separation necessary, consideration should be given to relocating route or developing Bike Path	Not recommended

(1) Use of any of above barriers is enhanced by providing/allowing parking on lane immediately outside barrier, assuming adequate clearance for opening car doors or a higher barrier (1-1.5 feet) is provided.

(2) Practical experience has shown that the height of raised curbs can conflict with the vertical pedal clearance causing an abrupt and often dangerous interruption of the cyclist's movement.

costs of construction. Design considerations related to the construction of bikeway grade separations and related facilities are based on the bicycle clearance requirements and operating characteristics described earlier and include design speeds, turning radii, grade limitations, and maneuvering and related clearances.

6.5.1.
Bridges and Overpasses

Underpasses are preferred to overpasses by bicyclists because of the opportunity to gain momentum on the initial downgrade and thereby ease the effort required on the subsequent upgrade. In addition, because vertical clearances for the bicyclist are less than those for the automobile, an underpass may be constructed with less total change in elevation than an overpass. However, the grading and construction of an underpass is likely to be more expensive than the cost of an overpass facility. Figure 6.11 identifies the general design and structural requirements for a separate bikeway overpass. Pedestrian bridge design standards are satisfactory in the construction of bikeway overpasses with the following exceptions:

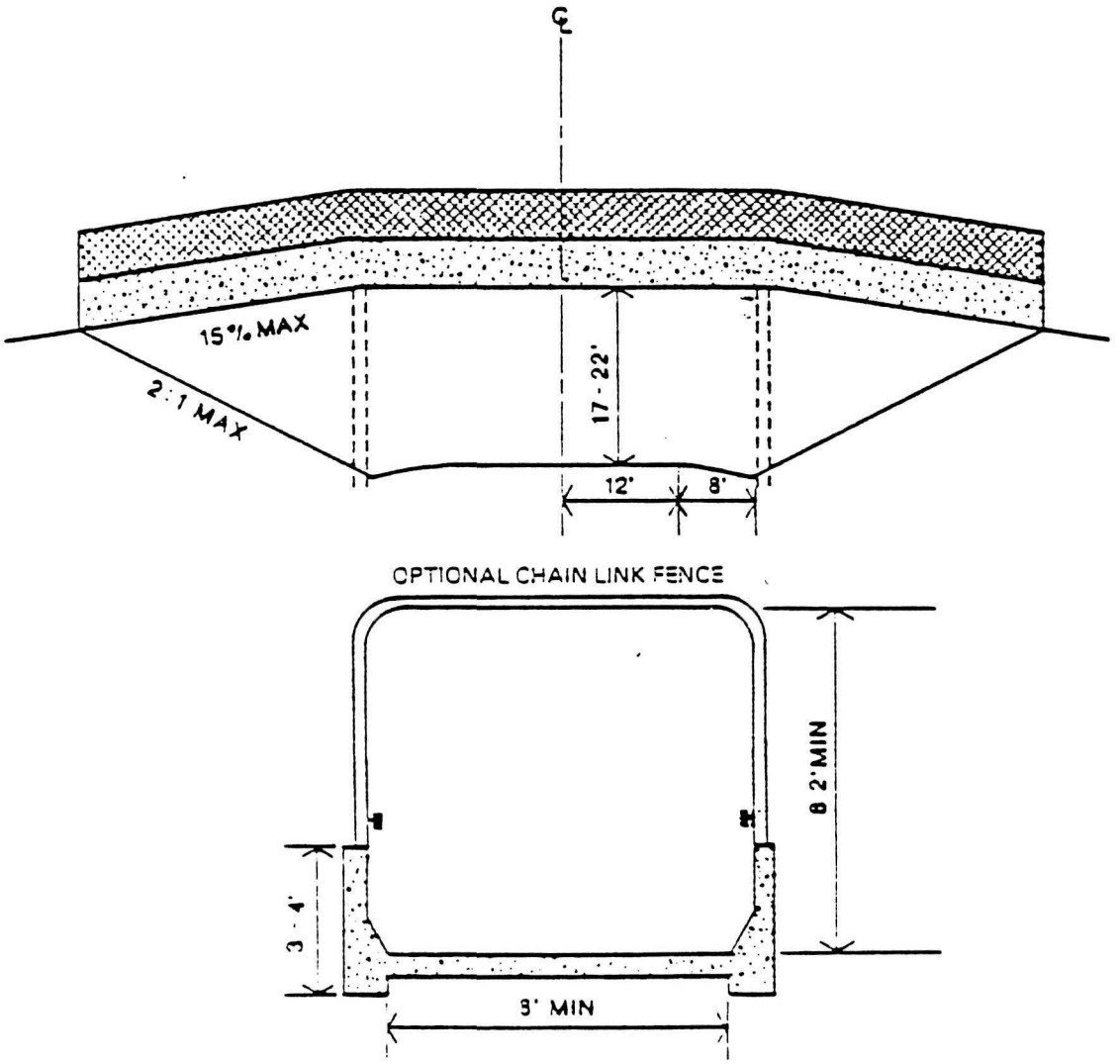

FIGURE 6.11
General Bikeway Overpass Standards

1. Minimum clear width should be 8.0 feet.
2. Parapet walls should be included.
3. Ramp slopes should not exceed 15 percent.

As an added convenience to the bicyclist, overpass approaches might be widened at the entrance to the structure or ramp so that bicyclists may stop prior to crossing the structure without disrupting other bicycle traffic.

In cases where bikeways parallel roadways, the roadway overpass structure might be designed with wider than normal outside traffic lanes, or carry sidewalks capable of accommodating a bikeway. Where high motor vehicle volumes or high speeds are expected, the bikeway should be separated from motor vehicle traffic lanes through the use of a physical barrier. The various means of accommodating bicycle facilities on existing roadway structures are shown in Figure 6.12.

6.5.2. Underpasses

For ease of operation, bicyclists generally prefer to utilize underpasses rather than steep-sloped overpasses. The problems that must be overcome in the design and construction of bikeway underpasses include adequate clearance, drainage and lighting to allow comfortable, safe riding. Figure 6.13 indicates the various methods by which bikeways can be carried parallel to existing or modified roadways as they pass under typical bridge structures. Specially designed bikeway underpasses may have their best application in conjunction with the design of new roadway facilities and/or reconstruction projects.

The most cost-effective means of providing a bikeway underpass is through the use of either concrete or corregated steel culvert sections which allow for adequate bikeway pavement width and lateral and vertical clearances. Figure 6.14 illustrates these general design requirements.

6.6. ANCILLARY FACILITIES

The development of bikeways frequently requires that a number of related, detailed problems be specifically addressed in order to provide adequate route continuity and rider safety. Elements such as proper drainage, drain grate configurations, and sidewalk-to-street transition ramps are all important considerations in this regard. Recommended solutions to these and a variety of other similar problems are discussed in the sections below.

6.6.1. Sidewalk Ramps and Transitions

It may be necessary to provide ramped connections from various types of bikeways either to roadway level from sidewalks or to sidewalk level from the roadway. Generally, such a transition will be approximately 6 inches in height. Where these transitions must be made over in-place curbing, it is recommended that a curb cut ramp be utilized, based on the example illustrated in Figure 6.15.

Bikeway on shoulder section structure of suitable width

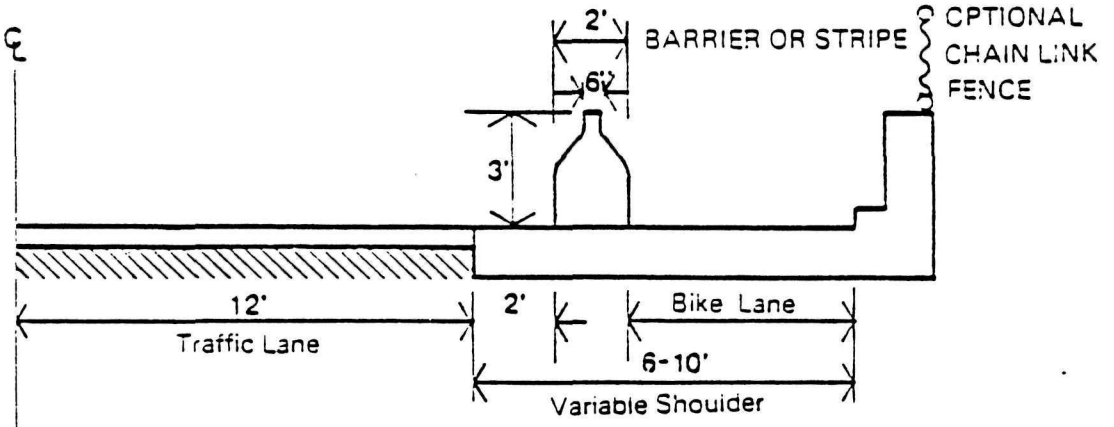

Bikeway on curb section structure of suitable width

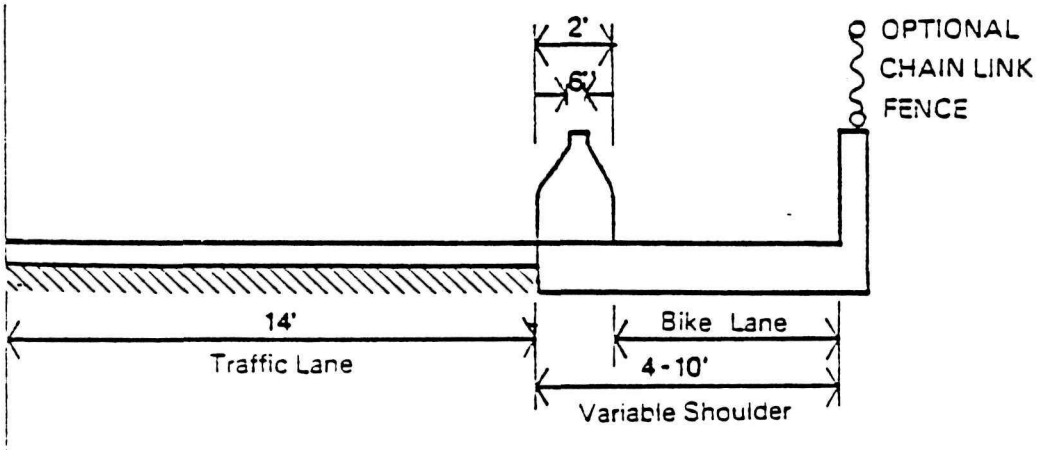

Cantilevered Bikeway on structure where x-section is deficient for solutions above

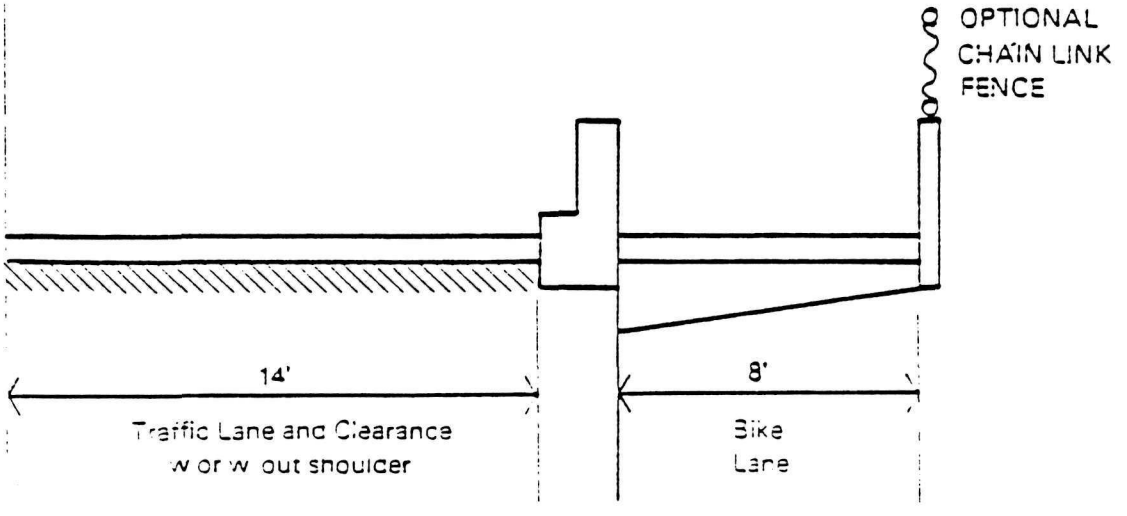

FIGURE 6.12
Standards for Joint Use of Roadway Overpass Structures

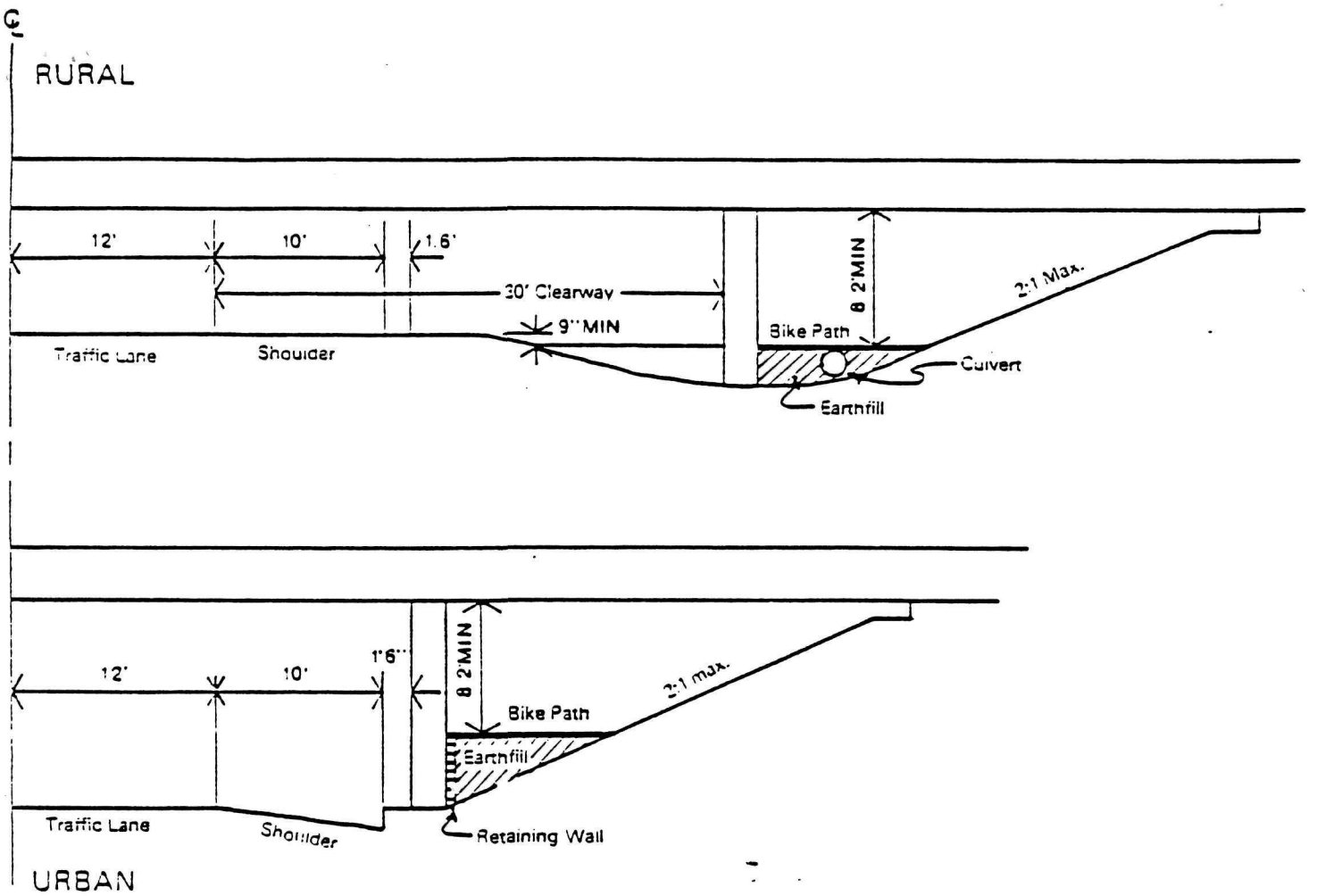

FIGURE 6.13
Standards for Joint Use of Roadway Underpass Structures

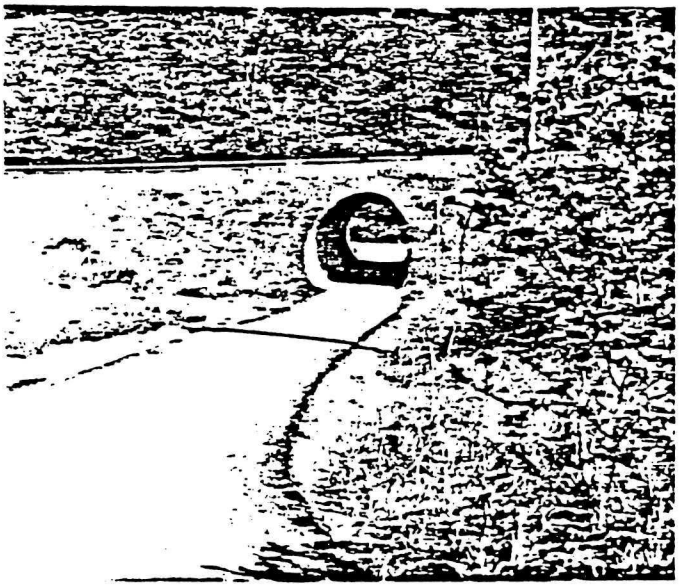

FIGURE 6.14
Multi-Plate Steel Underpass Application

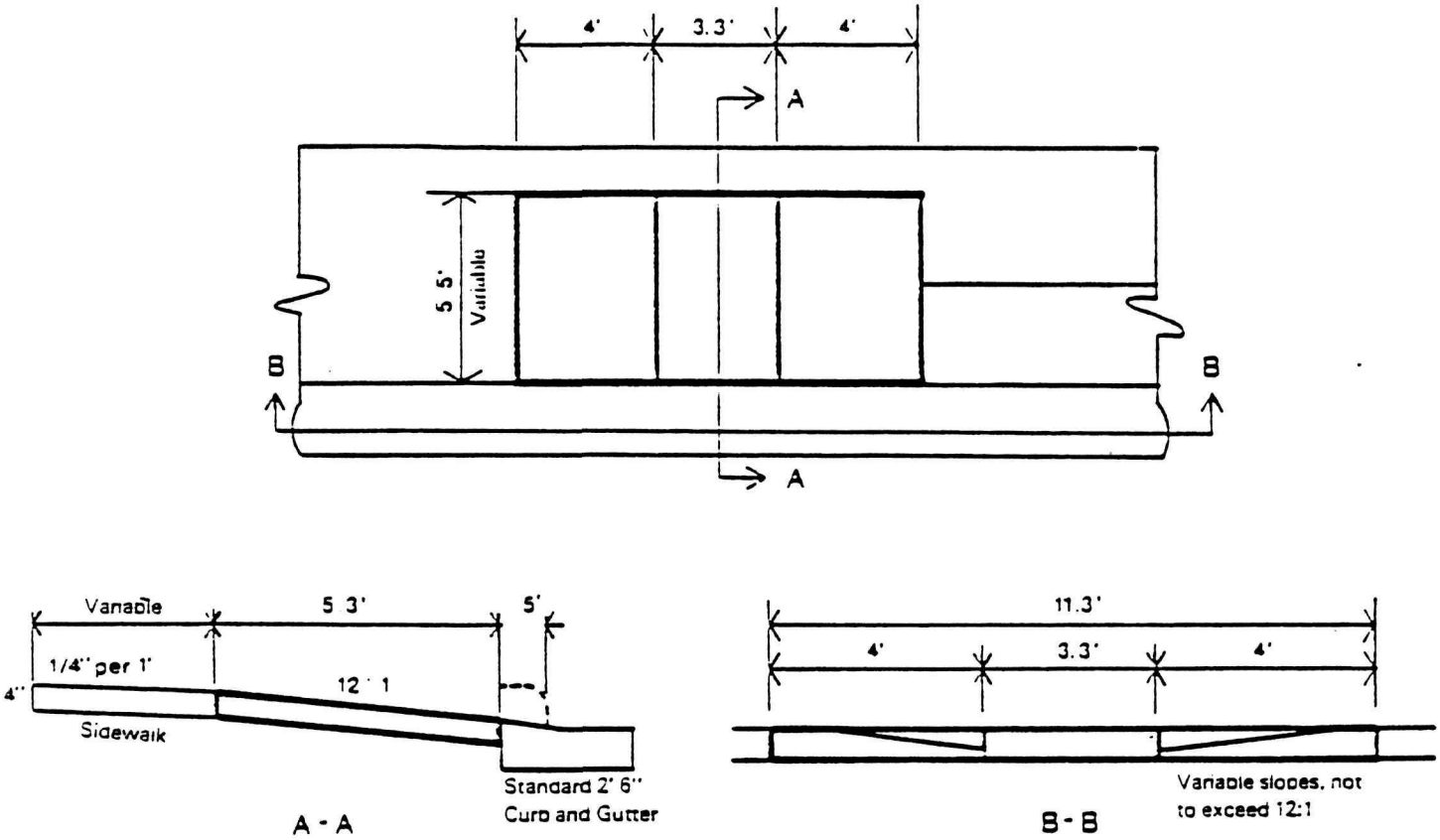

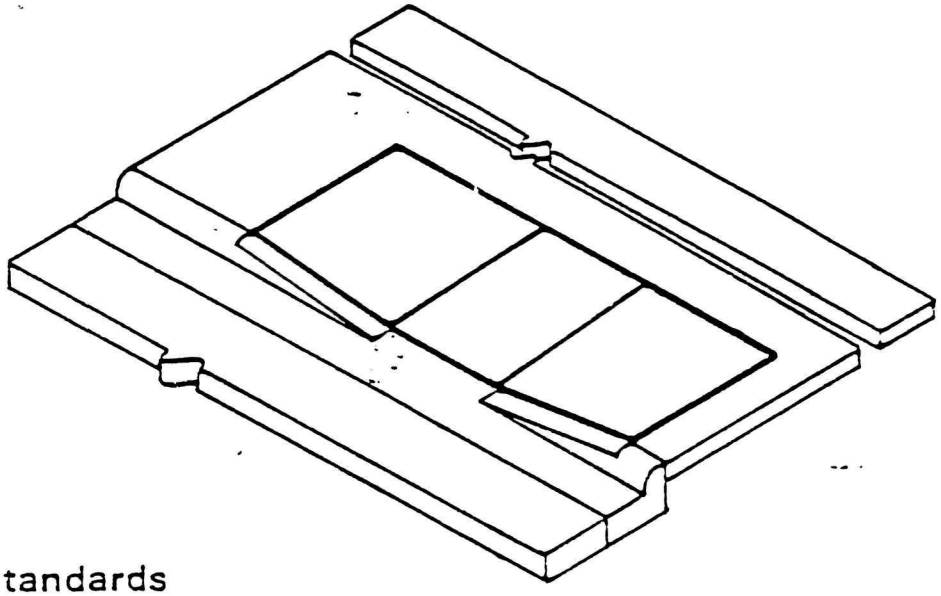

FIGURE 6.15
Curb Cut Ramp Design Standards

The major variables in transition ramps are the width of the ramp, which should equal the width of the connecting bikeway, and the slope of the ramp. Slopes range from 12:1 in the case of joint use by pedestrians, wheelchairs and bicycles, to 2:1 in cases where steeper slopes may be necessary to encourage bicyclists to slow substantially prior to entering the street or the sidewalk.

6.6.2.
Drainage Systems

Drainage and drainage system elements are important considerations in the design and construction of bikeways. In the case of both bike routes and bike lanes, adequate surface drainage is generally provided as part of the existing roadway design. However, the presence of drainage grates represents a significant safety hazard to bicyclists. Typically, to most efficiently meet the hydrodynamic requirements for optimum storm water systems, these grates are designed and installed with openings of three-fourths of an inch or more lying parallel to the curb. This configuration allows the wheels of modern lightweight bicycles to become entrapped, resulting in severe falls and possible injury to bicyclists.

Several alternative means are available to remedy this situation:

1. *Horizontal or diagonal cross-welded slats* may be applied where such treatment will not adversely affect required hydrodynamic performance.
2. *Perpendicular grate designs* are now becoming available for use where such treatment will not adversely affect required hydrodynamic performance.
3. *Diagonal or zig-zag (sinesoidal) grate designs* may be substituted where such treatment will not adversely affect required hydrodynamic performance.
4. *Side-opening drains* may be substituted integrally into the curb where such treatment will not adversely affect required hydrodynamic performance.
5. *Striping around existing grates* may prove helpful if structural modifications are not feasible.

Figure 6.16 illustrates the design specifications for perpendicular and diagonal grate castings. In addition, various manufacturers have a wide variety of optional grate designs available for use depending upon the performance requirements of particular storm sewer systems. Grates along bikeways should be remounted flush with the adjacent pavement, and periodic maintenance should be provided to prevent the accumulation of debris in these areas.

In the case of separate bike paths, adequate provisions for drainage are essential if a high level of safety as well as pavement life is to be maintained. The exact requirements for drainage systems along separate bike paths will be dependent upon such factors as:

1. Surrounding area runoff patterns
2. Grades
3. Slopes
4. Soil conditions
5. Precipitation levels

It is recommended that a one-fourth (1/4) inch to three-eighths (3/8) inch per foot slope be maintained along a bikeway surface to adequately accommodate runoff. Though bikeways may be designed with a crown and incorporate these slopes, it is recommended that for ease of construction such facilities be sloped in one direction. A one foot wide drainage ditch with side slopes

of approximately 2:1 located parallel to and below the bikeway is adequate to accommodate surface runoff.

Where bikeways are located on hillsides it is advisable to provide a suitably designed ditch on the uphill side of the path to intercept hillside runoff. In such cases, it may also be necessary to provide special catch basins and/or culverts to carry hillside drainage across the path. Where wet soil conditions are prevalent, consideration should be given to providing adequate under drainage to bikeways, particularly in areas which experience freezing and frost heave conditions.

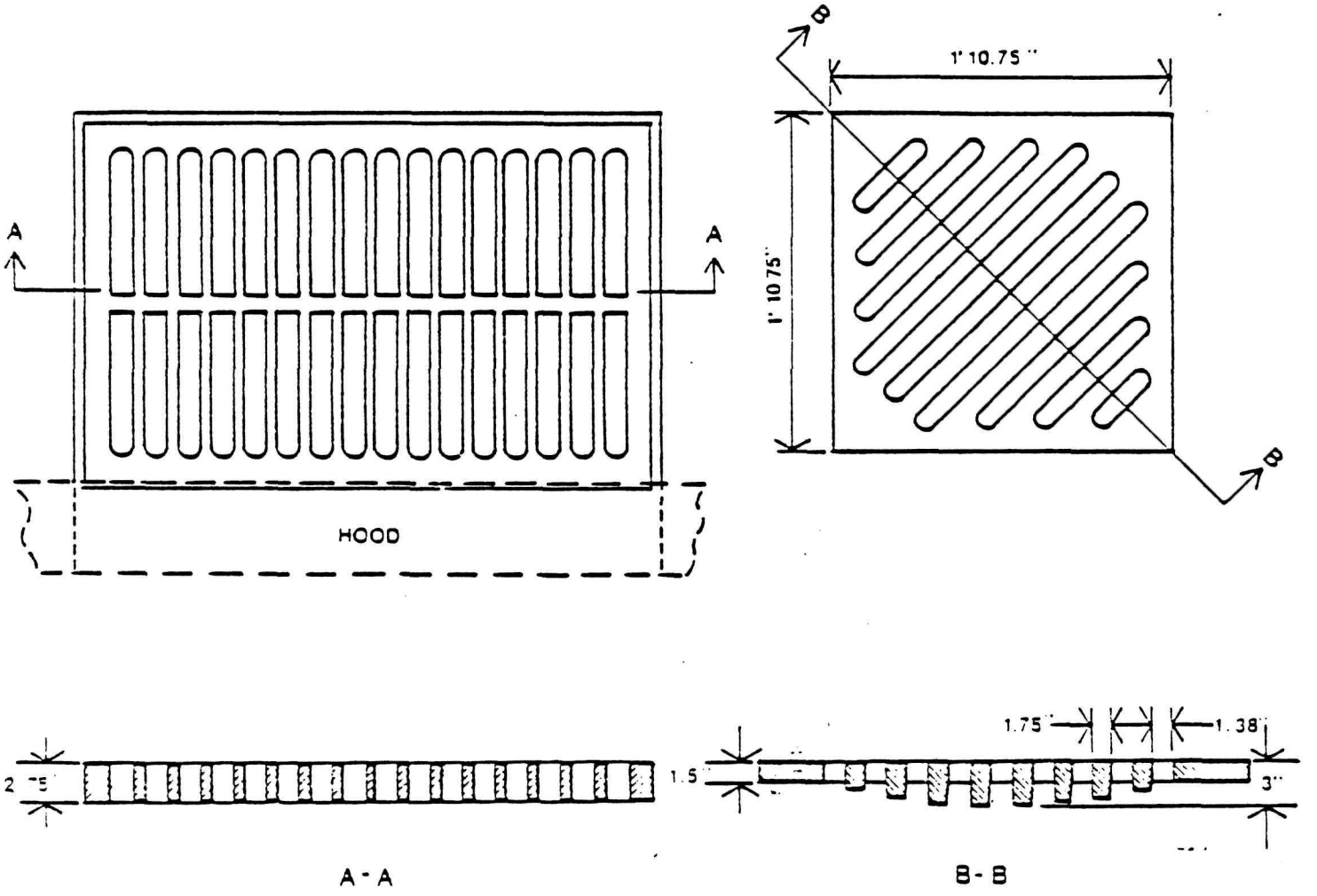

FIGURE 6.16
Typical Drainage Grate Specifications

6.6.3.
Other Ancillary Structural Facilities

Individual conditions may require a variety of other structural facilities or solutions to ensure the safety and effectiveness of various bicycle facilities. In areas where bicyclists and pedestrians share the same right-of-way or surface, special vertical transitions may be required where stairways or steps serve the pedestrian. In cases where stair runs are short and wide, it is possible to build semi-permanent wooden ramps over the stairs. Ramps

of this nature may follow the slope of the stair run over short distances, but where stairway dimensions do not allow this type of solution, separate facilities or route relocation may be required.

A variety of topographic conditions may require the construction of various retaining wall structures designed to serve a number of purposes. All standard types of materials and retaining wall designs have application in the construction of bikeways. Perhaps the largest single factor in the consideration of retaining wall structures is the cost of various alternative designs.

In addition to the use of landscaping and plant materials as a possible barrier between motor vehicle lanes and adjacent bikeways, landscaping may be considered for application in areas where visual and audio buffers are required. Vegetative buffers can also reduce the effects of air pollution. The use of selected species in various areas will be dependent upon characteristics of size, growth patterns, air, light and water requirements and general amenity. The sometimes considerable cost of special landscaping may be in part offset in areas where extensive maintenance is not necessary.

6.6.4.
Bikeway Lighting

Proper illumination of bicycle facilities is necessary for the provision of minimum levels of visibility, safety and security. At present, limited information exists on appropriate levels of illumination for bicycle facilities. However, several major considerations should be taken into account in providing adequate bikeway lighting.

Amount of Illuminance. The level of illumination required on a specific facility is dependent on the amount of night-time use that is expected and the nature or characteristics of the area through which the facility is to pass. In the case of on-street bikeways, existing roadway illumination should be adequate to provide for safe bicycle travel. However, in instances where existing illumination fails to highlight potential hazards, such as drainage grates, consideration should be given to providing additional light sources. It is recommended that approximately 0.9 footcandles be provided to allow for adequate visibility, safety and security on off-street as well as on-street bikeways. In addition, ~~it is recommended that~~ variation in the level of illumination along a bikeway should not be more than one-third of the average level of illumination along the entire roadway segment (Ref. 15).

Special Considerations. In a variety of circumstances, consideration should be given to increasing the minimum level of illumination beyond that recommended above. At the intersection of bikeways and/or roadways the level of illumination should approximate the sum of the average levels of illumination on the two intersecting roadways. Areas of transitional lighting on approaches to isolated bikeway or roadway intersections should be provided based on an increase of 50 percent over the average level of route illumination. Such transitional lighting should be provided for a distance of not less than 300 feet on either side of the isolated intersection. Separate bike paths located in wooded or brushy areas should receive additional illumination for safety and security purposes, as should tunnels and underpasses.

Type of Luminaire. The purpose of providing specific levels of illumination for bikeways is to light both the facility and the bicyclist. Accordingly, luminaires should generally be a minimum of 20 feet in height and have overhang and shading characteristics appropriate to the circumstances in which they are to be placed. Consideration should also be given to the ease of access and the degree of maintenance required by the various types of luminaires currently available.

GLOSSARY

Angle of Incidence: The angle between a bicyclist and a motorist approaching an intersection or a transition section.

Bicycle Facility: Any physical facility provided for the exclusive or semi-exclusive use of bicycles including bikeways, bicycle parking facilities, and ancillary facilities.

Bicycle Plan: The study, presentation, and implementation schedule of bicycle facilities, bicycle programs, and other related improvements and actions which exist and are proposed in a given community.

Bicycle Trip: A utilitarian bicycle movement from origin to destination or a recreational bicycle movement from origin to origin.

Bike Lane, Protected: An on-street bikeway in which motor vehicle and bicycle travel lanes are separated by positive physical barriers; a Class II bikeway.

Bike Lane, Unprotected: An on-street bikeway in which separate motor vehicle and bicycle travel lanes are designated visually by signs and street markings; a Class II bikeway.

Bike Path: An off-street bikeway completely separated from the roadway surface, but not necessarily outside the roadway right-of-way; a Class I bikeway.

Bike Route: A street signed for bicycle use but sharing the roadway with motor vehicle traffic; a Class III bikeway.

Bikeway: Generic term encompassing all types of facilities aiding bicycle movement.

Generator: An area or building which attracts or encourages a high number of bicycle trips to or from the locale.

Lateral Separation: The continuous division of travel lanes by symbolic or actual physical barriers to delineate bicycle and motor vehicle use areas.

Network, Bikeway: A system of bicycle facilities providing for continuous and convenient bicycle travel throughout a specified area.

Obstruction, Dynamic: A moving obstruction (for example, a passing vehicle, a pedestrian, or another bicycle).

Obstruction, Static: An obstruction which cannot move (for example, curb or building).

Off-Street Bikeway: A bikeway located away from the roadway surface but which may be within the street or highway right-of-way.

On-Street Bikeway: A bikeway located on or immediately contiguous to the roadway surface.

Recreational Bicycling: Bicycle use which has no particular destination.

Service Life: The period of time during which a facility can be used economically without replacement.

Sidewalk Bikeway: A bikeway within the street or highway right-of-way which both pedestrians and bicyclists may use.

Stopping Sight Distance: The distance necessary for a bicycle to stop safely after visually perceiving a condition or object.

Transition Section: The area in which a bikeway ends or begins; an area where one bikeway type connects to another bikeway type.

Transition, Vertical: A structure permitting the bicyclist to move from one elevation to another (for example, stair ramps).

Utilitarian Bicycling: Bicycle use which has a specific destination.

Velodrome: A facility designed specifically for bicycle racing.

SELECTED BIBLIOGRAPHY

PLANNING AND DESIGN MANUALS

1. American Association of State Highway, and Transportation Officials, Guide for Bicycle Routes, Washington, D.C., 1974.

2. Fruin, John J., Pedestrian Planning and Design, New York, 1971.

3. Institute of Transportation and Traffic Engineering, University of California, Los Angeles, Bikeway Planning Criteria and Guidelines, Sacramento, California, 1972.

4. Jarrell, Temple R., Bikeways: Design - Construction - Programs, National Recreation and Park Association, Arlington, Virginia, 1974.

5. Minnesota State Planning Agency, Bikeways Guide: Model Criteria for Bikeways and Recreational Lanes Within the Highway Right-of-Way, St. Paul, Minnesota, 1974.

BIKEWAY PLANS

6. Barton-Aschman Associates, Inc., The Bicycle: A Plan and Program for Its Use as a Mode of Transportation and Recreation, (Atlanta Regional Commission), St. Paul, Minnesota, 1973.

7. Barton-Aschman Associates, Inc., Bicycling in Tennessee: A State Plan for Bicycle Facilities and Programs, (Tennessee Departments of Conservation and Transportation), Minneapolis, Minnesota, 1975.

8. Bivens & Associates, Inc., Arizona Bikeways: A Comprehensive Bicycle Program for Arizona, 1973.

9. DeLeuw Cather & Co., Bicycle Circulation and Safety Study, City of Davis, University of California, 1972.

10. Denver Planning Office, The Bikeway Plan, Denver, Colorado, 1972.

11. Hart-Krivatsy-Stubee, BART/Trails (U.S. Department of Transportation), 1974.

12. Smith, Haldon J., Ann Arbor Bicycle Path Study, Ann Arbor, Michigan, 1972.

13. Tempe Planning Department, Tempe Bikeway Study: Preliminary Plans and Recommendations, Tempe, Arizona, 1973.

14. W. Strok & Associates Limited, Bikeway System Within Metropolitan Toronto, Toronto, 1974.

OTHER RELATED REPORTS AND PAPERS

15. American Society of Civil Engineers, Proceedings of the Seminar of Bicycle/Pedestrian Planning and Design - 1974, New York, 1974.

16. Barton-Aschman Associates, Inc., Bicycling in Tennessee: A Framework for Establishing State Policies, (Tennessee Departments of Conservation and Transportation), Minneapolis, Minnesota, 1975.

17. Barton-Aschman Associates, Inc., Bicycling in Tennessee: An Inventory of Users, Facilities and Programs, (Tennessee Departments of Conservation and Transportation), Minneapolis, Minnesota, 1974.

18. Bureau of Outdoor Recreation, Digest - Federal Outdoor Recreation Programs and Recreation-Related Environmental Programs, U.S. Department of Interior, Washington, D.C., 1970.

19. DeLeuw Cather & Co., Bikeways, State-of-the-Art 1974 (Department of Transportation, Federal Highway Administration), 1974.

20. Hicks, R.G., Berryhill, J.J., and Hardcastle, J.H., Low Cost Bike Path Pavements, unpublished paper.

21. National Committee on Uniform Traffic Laws and Ordinances, Uniform Vehicle Code and Model Traffic Ordinance, Washington, D.C., 1968.

22. National Joint Committee on Uniform Traffic Control Devices and American Association of State Highway Officials, Manual on Uniform Traffic Control Devices, U.S. Department of Transportation, Federal Highway Administration, 1971.

23. Ohrn, Carl E., and Podolske, Richard C., A Framework for Investing in Urban Bicycle Facilities, Barton-Aschman Associates, Inc., 1974.

24. Oregon Department of Transportation, Oregon Bikeways Progress Synopsis, 1972.

25. Tennessee Department of Transportation, Rules and Regulations for the Construction of Bicycle Facilities, Nashville, 1974.

26. U.S. Environmental Protection Agency, Bicycle Transportation, Washington, D.C., 1974.